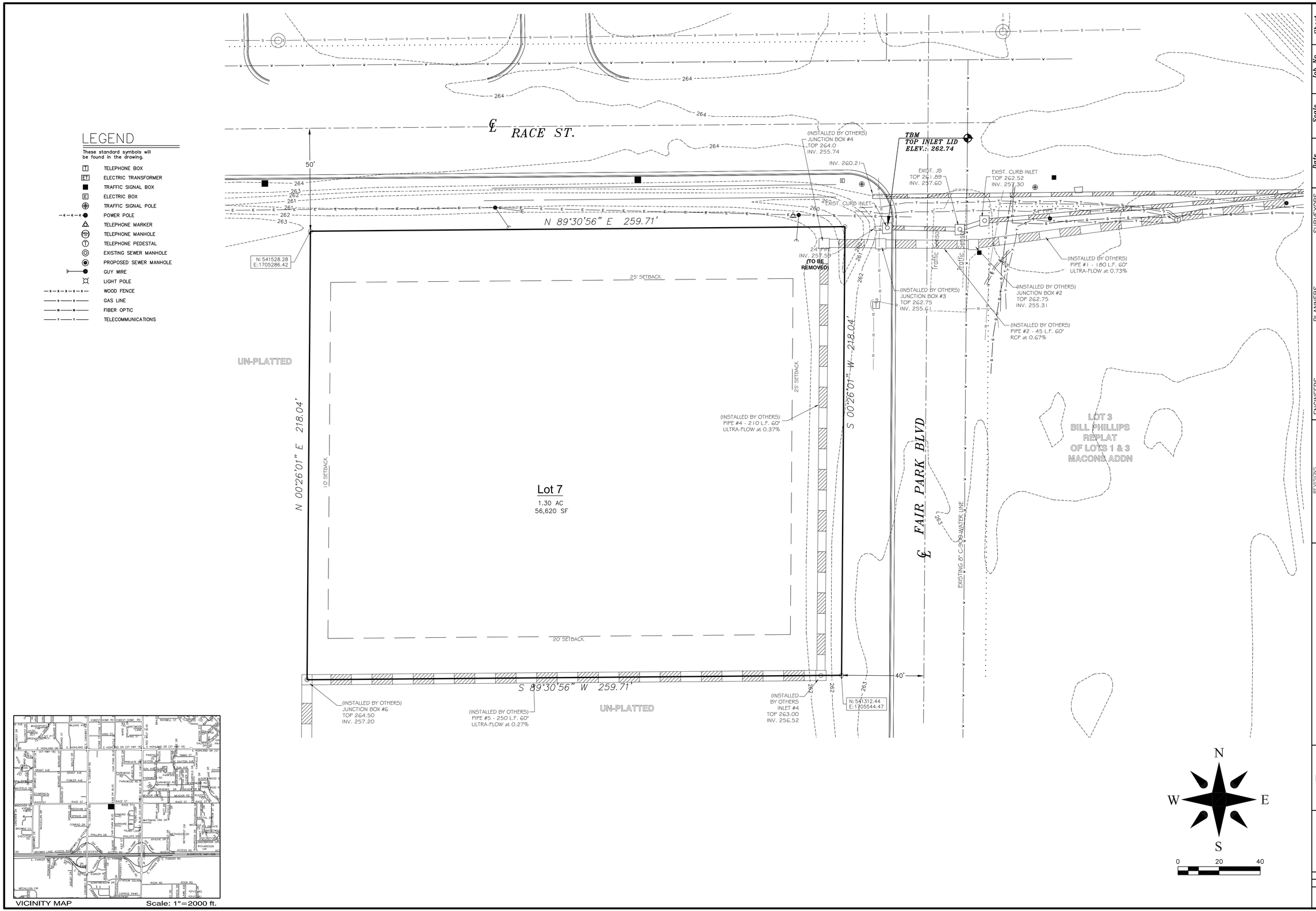


Sheet No. 1 of 9

Job No. 119096

County CRAIGHEAD

Scale 1"=20'

Range 04E

Checked by: GH

Date 3-24-2020

Section 28

Township 14N

Drawn By: RE

ONLY COPIES WITH VIOLET COLORED SIGNATURE ARE ORIGINAL CIVILOGIC COPIES

© 2019, Civilogic

ENGINEERS PLANNERS SURVEYORS
Civilogic
203 Southwest Dr.–Jonesboro, AR–(870)932–7880–www.civilogic.net

REVISIONS

| DATE | REV. DESCRIPTION | ISSUED BY: |
|---|---|---|
| 00-00-00 | | |

# EXISTING CONDITIONS
2631 RACE ST.
JONESBORO, ARKANSAS
FOR
FNBC COMMUNITY BANKERS

CERTIFICATE OF AUTHORIZATION
CIVILOGIC
No. 329
ARKANSAS–ENGINEER

REGISTERED PROFESSIONAL SURVEYOR
STATE OF ARKANSAS
NO. 1273
SIGNATURE
03-24-2020
DATE
GEORGE M. HAMMAN

JOB NO.: 119096

SHEET NUMBER

1 of 9

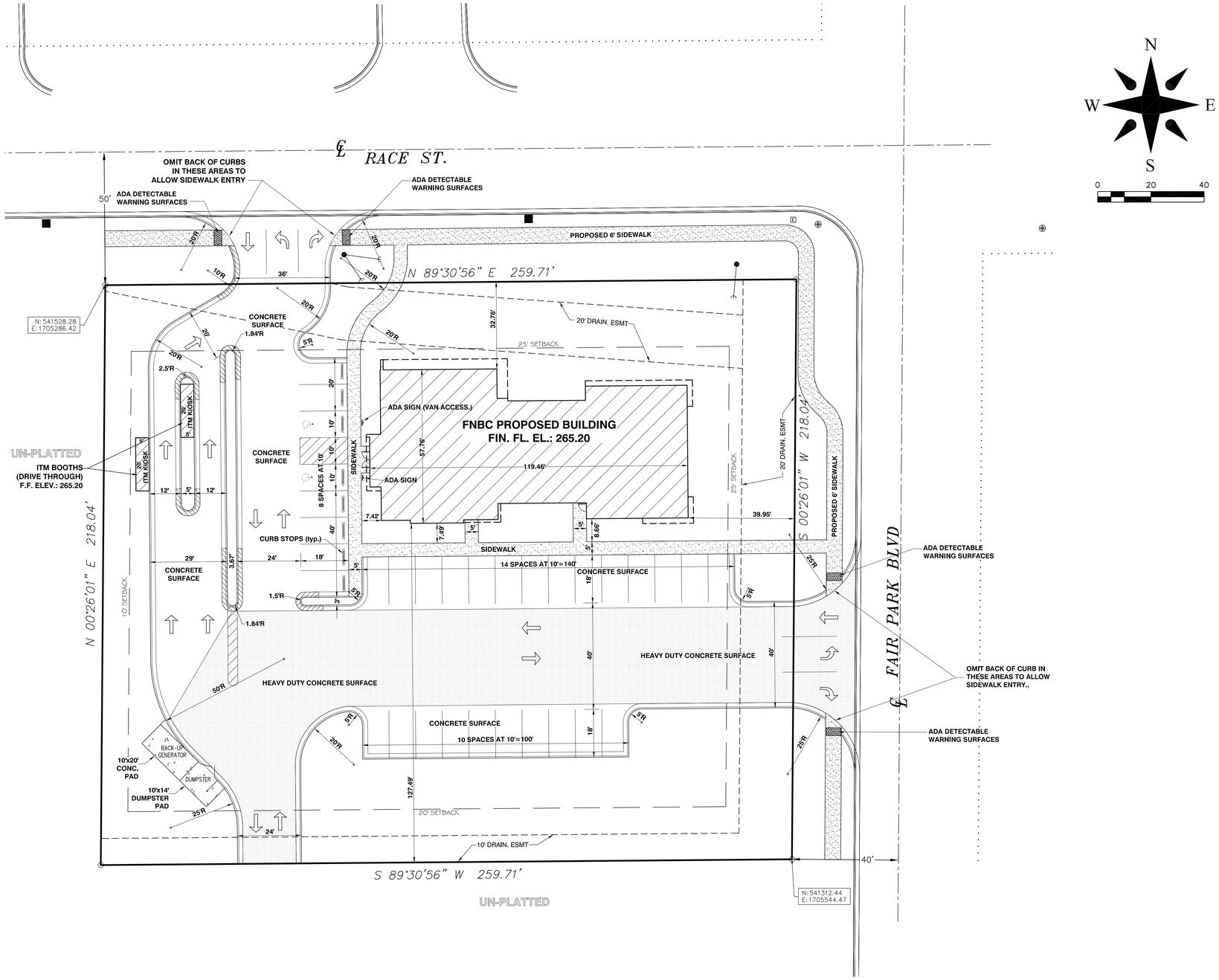


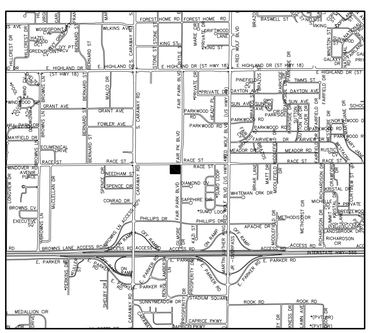

VICINITY MAP Scale: 1"=2000 ft.

Sheet No. 2 of 9

Job No. 119096

County CRAIGHEAD

Scale 1"=20'

Date 2-24-2020

Section 28

Township 14N

Range 04E

Drawn By: RE

Checked by: GH

ONLY COPIES WITH VIOLET COLORED SIGNATURE ARE ORIGINAL CIVILOGIC COPIES

© 2019, Civilogic

ENGINEERS PLANNERS SURVEYORS

Civilogic

203 Southwest Dr.–Jonesboro, AR–(870)932–7880–www.civilogic.net

REVISIONS

| DATE | REV. DESCRIPTION | ISSUED BY: |
|---|---|---|
| 2-28-2020 | SIDEWALKS & ADA WARNING PADS | ADRENALINE |
| 3-24-2020 | DRAINAGE | CITY COMMENTS |

# PROPOSED SITE LAYOUT

2631 RACE ST.
JONESBORO, ARKANSAS
FOR
FNBC COMMUNITY BANKERS

CERTIFICATE OF AUTHORIZATION
CIVILOGIC
No. 329
ARKANSAS–ENGINEER

STATE OF ARKANSAS
REGISTERED PROFESSIONAL ENGINEER
No. 7880
GEORGE M. HAMMAN

JOB NO.: 119096

SHEET NUMBER

2 of 9

NOTES:

1) A GRADING PERMIT SHALL BE OBTAINED FROM THE CITY OF JONESBORO PRIOR TO THE COMMENCEMENT OF EARTHWORK ACTIVITY.

2) HANDICAPPED PARKING AND ACCESSIBLE ROUTES SHALL MEET A.D.A. REQUIREMENTS. THE MAXIMUM CROSS - SLOPE ON ANY ACCESSIBLE ROUTE SHALL NOT EXCEED 2.0% AND THE MAXIMUM RUNNING SLOPE ON ANY ACCESSIBLE ROUTE SHALL NOT EXCEED 8.3%. HANDICAPPED PARKING AREAS SHALL NOT SLOPE MORE THAN 2.0% IN ANY DIRECTION. ALL NEW SIDEWALKS CONSTRUCTED WITHIN THE RIGHT-OF-WAY SHALL MEET A.D.A. STANDARDS.

3) VERTICAL CONTROL NAVD 1988, THIRD ORDER.

4) HORIZONTAL CONTROL NAD 83, THIRD ORDER CLASS 1, ARKANSAS STATE PLANE NORTH ZONE.

5) FLOW ARROWS INDICATE DESIGN DIRECTION OF FLOW & PLAN INTENT. OCCASIONALLY THERE WILL BE A TYPOGRAPHICAL ERROR IN FINISHED GRADES. IF A CONFLICT IS REVEALED, THE FLOW ARROWS CONTROL, AND THE DESIGN ENGINEER SHALL BE CONTACTED IN ORDER TO RESOLVE THE CONFLICT.

6) PRECAST DRAINAGE STRUCTURES ARE ACCEPTABLE FOR USE ON THIS DEVELOPMENT. HOWEVER, THEY SHOULD BE MANUFACTURED SIX INCHES (6") SHORTER THAN CURRENT METHODS INDICATE. THAT WILL ALLOW HIGHER TOLERANCES IN THE EVENT A STRUCTURE IS PLACED SLIGHTLY HIGHER THAN DESIGN GRADES. TOPS SHALL BE POURED IN PLACE, ON SITE.

7) ALL DOWNSPOUTS & ROOF DRAINS TO CONNECT TO UNDERGROUND DRAINAGE SYSTEM BY UNDERGROUND PIPES. REFER TO ARCHITECTURAL PLANS FOR DOWNSPOUT LOCATIONS. DOWNSPOUTS ARE TO BE 3"x4" ALUMINUM. FOR EACH, ATTACH RUBBER BOOT TO CONVERT TO 4" DIAMETER SCHEDULE 40 PVC; THEN EXTEND DRAIN WITH SWEEPING 90° BEND AND EXTEND WITH 4" SCHEDULE 40 PVC TO NEAREST DRAINAGE STRUCTURE.

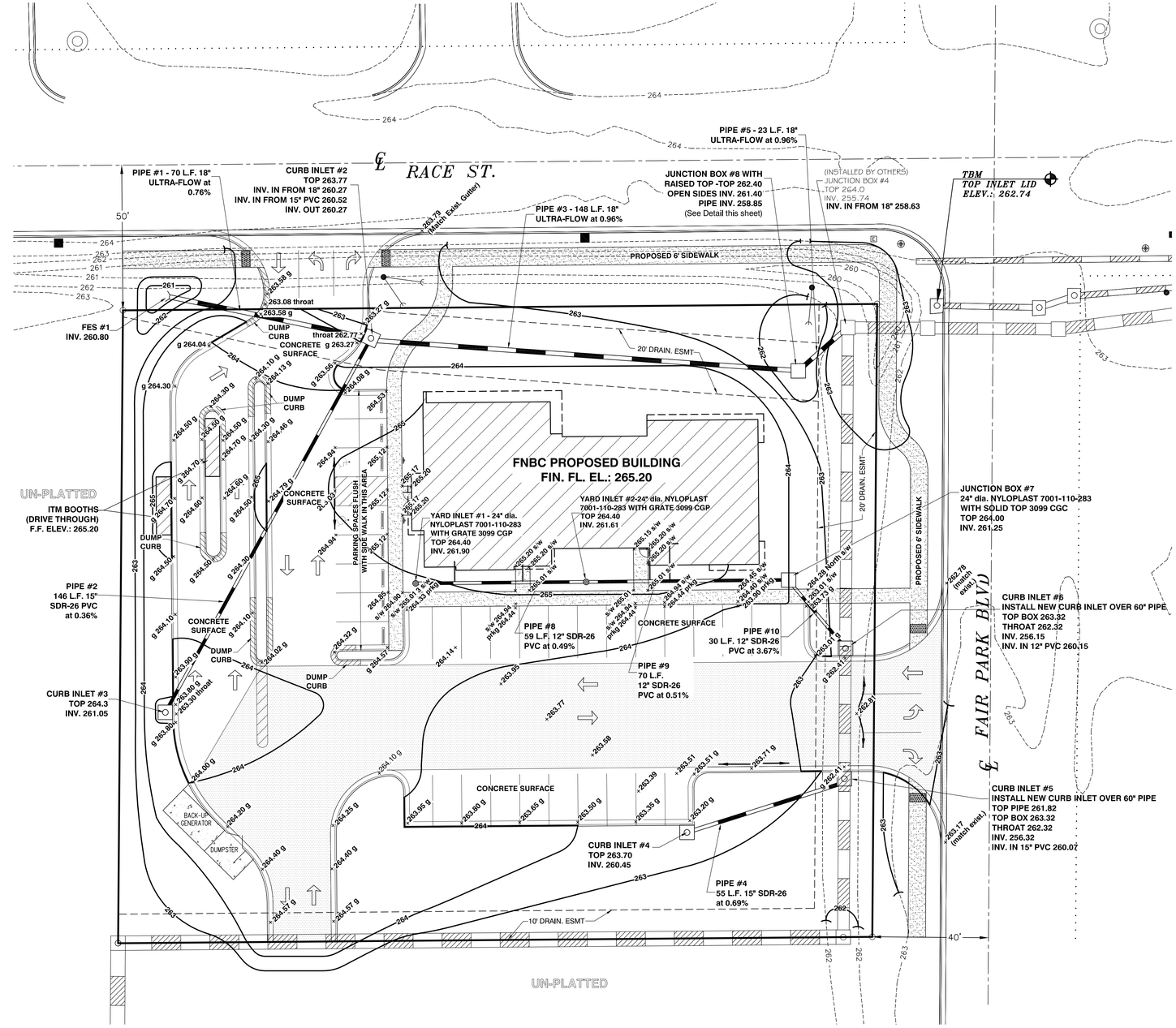


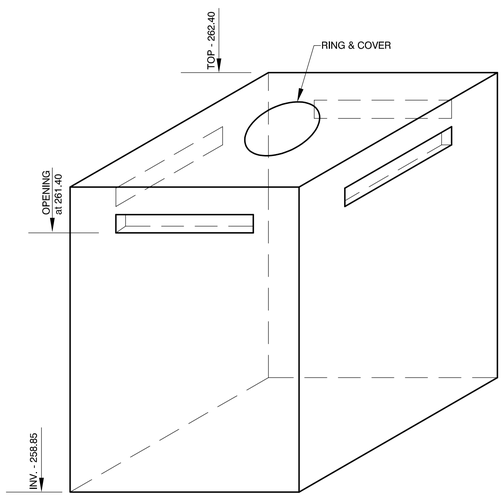


RAISED TOP JUNCTION BOX #8

811 Know what's **below.** **Call** before you dig.

N W E S

0 20 40

## LEGEND

These standard symbols will be found in the drawing.

- TELEPHONE BOX
- ELECTRIC TRANSFORMER
- TRAFFIC SIGNAL BOX
- ELECTRIC BOX
- TRAFFIC SIGNAL POLE
- POWER POLE
- TELEPHONE MARKER
- TELEPHONE MANHOLE
- TELEPHONE PEDESTAL
- EXISTING SEWER MANHOLE
- PROPOSED SEWER MANHOLE
- GUY WIRE
- LIGHT POLE

Sheet No. 3 of 9

Job No. 119096 | Scale 1"=20' | Date 02-24-2020

County CRAIGHEAD | Range 04E | Township 14N | Section 28

Drawn By: RE | Checked by: GH

ONLY COPIES WITH VIOLET COLORED SIGNATURE ARE ORIGINAL CIVILOGIC COPIES

© 2019, Civilogic

ENGINEERS PLANNERS SURVEYORS
Civilogic
203 Southwest Dr.–Jonesboro, AR–(870)932-7880–www.civilogic.net

REVISIONS

| DATE | REV. | DESCRIPTION | ISSUED BY |
|---|---|---|---|
| 03-2020 | 1 | SIDEWALK & ADA MARKING PLANS | CITY COMMENTS |
| 04-24-2020 | 2 | DRAINAGE | |

# GRADING PLAN
2631 RACE ST.
JONESBORO, ARKANSAS
FOR
FNBC COMMUNITY BANKERS

CERTIFICATE OF AUTHORIZATION — CIVILOGIC — No. 329 — ARKANSAS–ENGINEER

STATE OF ARKANSAS REGISTERED PROFESSIONAL ENGINEER No. 7880 GEORGE M. HAMMAN

JOB NO.: 119096
SHEET NUMBER
3 of 9

## LEGEND

These standard symbols will be found in the drawing.

- TELEPHONE BOX
- ELECTRIC TRANSFORMER
- TRAFFIC SIGNAL BOX
- ELECTRIC BOX
- TRAFFIC SIGNAL POLE
- POWER POLE
- TELEPHONE MARKER
- TELEPHONE MANHOLE
- TELEPHONE PEDESTAL
- EXISTING SEWER MANHOLE
- PROPOSED SEWER MANHOLE
- GUY WIRE
- LIGHT POLE
- WOOD FENCE
- GAS LINE
- FIBER OPTIC
- TELECOMMUNICATIONS

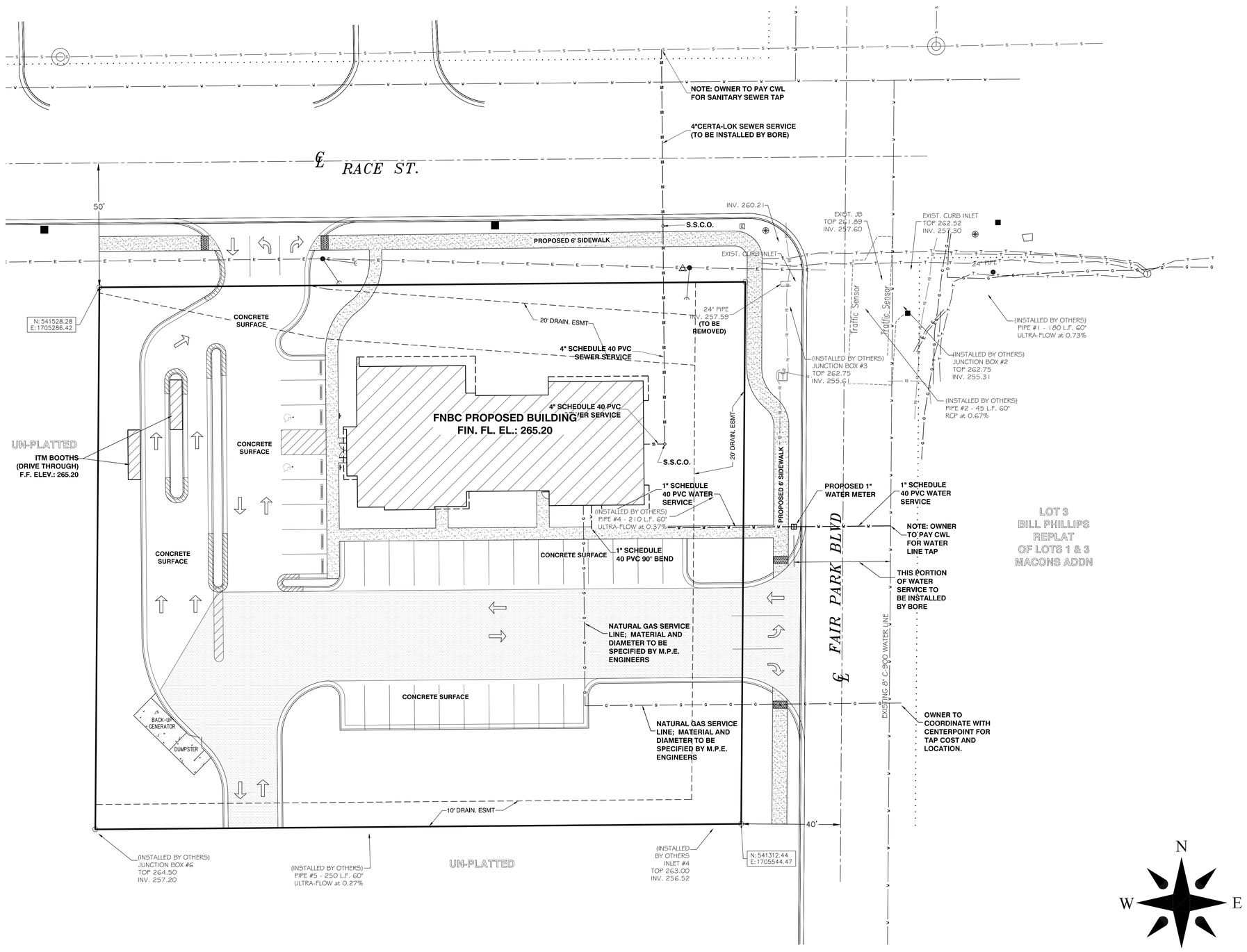


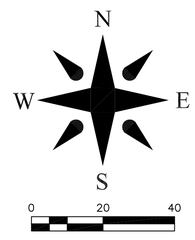


Sheet No. 4 of 9

Job No. 119096 | County CRAIGHEAD | Scale 1"=20' | Range 04E | Township 14N | Section 28 | Date 02-24-2020 | Drawn By: RE | Checked by: GH

ONLY COPIES WITH VIOLET COLORED SIGNATURE ARE ORIGINAL CIVILOGIC COPIES

© 2019, Civilogic

Civilogic
ENGINEERS PLANNERS SURVEYORS
203 Southwest Dr.-Jonesboro, AR-(870)932-7880-www.civilogic.net

REVISIONS

| DATE | REV. DESCRIPTION | ISSUED BY: |
|---|---|---|
| 2-24-2020 | DRAINAGE | DPT COMMENTS |

# UTILITY SERVICES PLAN
## 2631 RACE ST.
## JONESBORO, ARKANSAS
## FOR
## FNBC COMMUNITY BANKERS

CERTIFICATE OF AUTHORIZATION NO.
CIVILOGIC
No. 329
ARKANSAS-ENGINEER

STATE OF ARKANSAS
REGISTERED PROFESSIONAL ENGINEER
No. 7880
GEORGE M. HAMMAN

JOB NO.: 119096
SHEET NUMBER
4 of 9

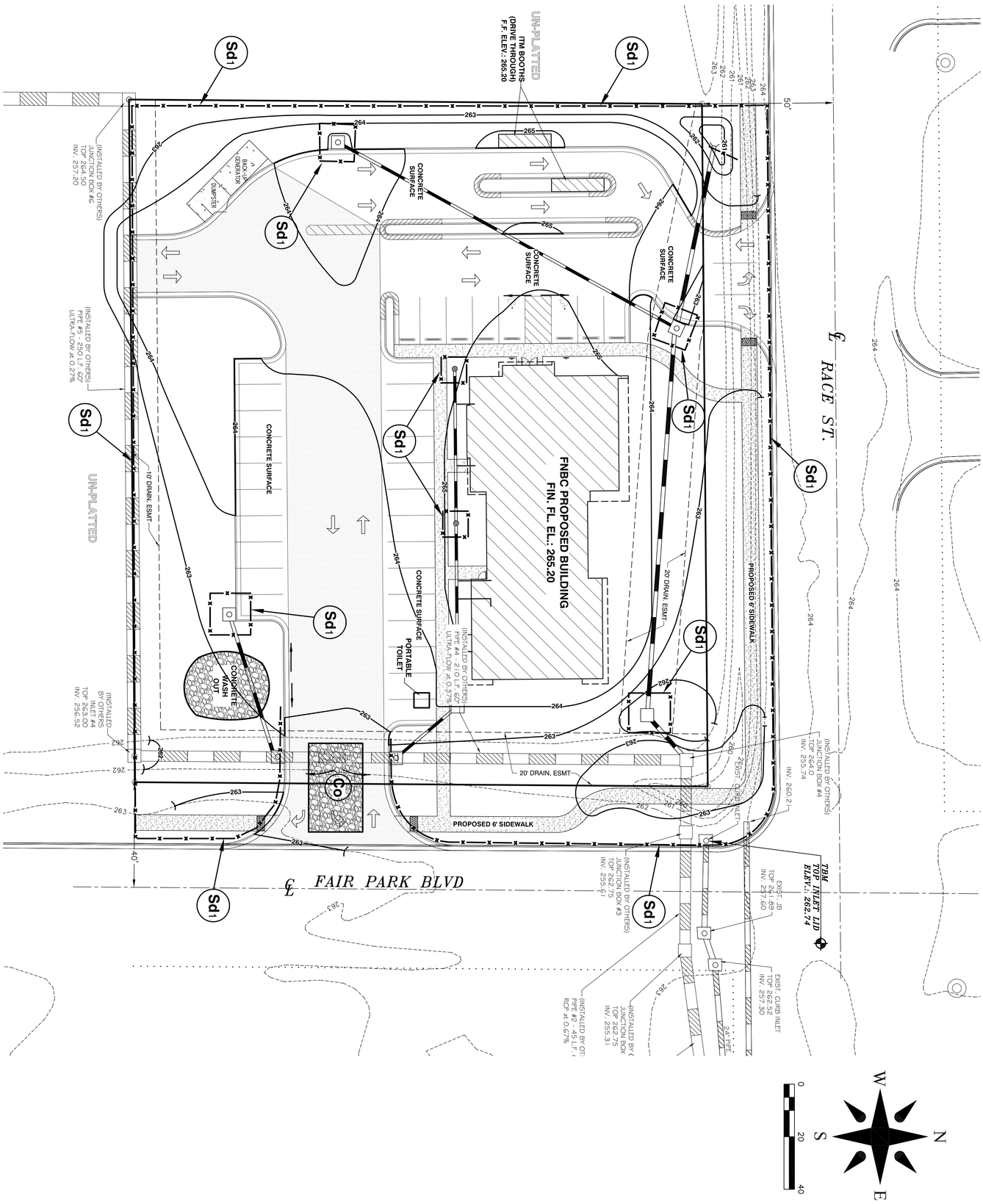


| | | | | | |
|---|---|---|---|---|---|
| **SOIL EROSION & CONTROL PLAN**<br>2631 RACE ST.<br>JONESBORO, ARKANSAS<br>FOR<br>FNBC COMMUNITY BANKERS | REVISIONS<br>DATE / REV. DESCRIPTION / ISSUED BY:<br>1-24-2020 / DRAINAGE / CITY COMMENTS | ENGINEERS PLANNERS SURVEYORS<br>Civilogic<br>203 Southwest Dr.–Jonesboro, AR–(870)932–7880–www.civilogic.net | Date: -------<br>Scale: 1"=20'<br>Job No.: 119096<br>Section: 28<br>Township: 14N<br>Range: 04E<br>County: CRAIGHEAD<br>Drawn By: RE<br>Checked by: GH | Sheet No. 5 of 9 | |

ONLY COPIES WITH VIOLET COLORED SIGNATURE ARE ORIGINAL CIVILOGIC COPIES

© 2019, Civilogic

CERTIFICATE OF AUTHORIZATION
ARKANSAS-ENGINEER
CIVILOGIC
No. 329

STATE OF ARKANSAS
REGISTERED PROFESSIONAL ENGINEER
No. 7880
GEORGE M. HAMMAN

JOB NO.: 119096
SHEET NUMBER
5 of 9

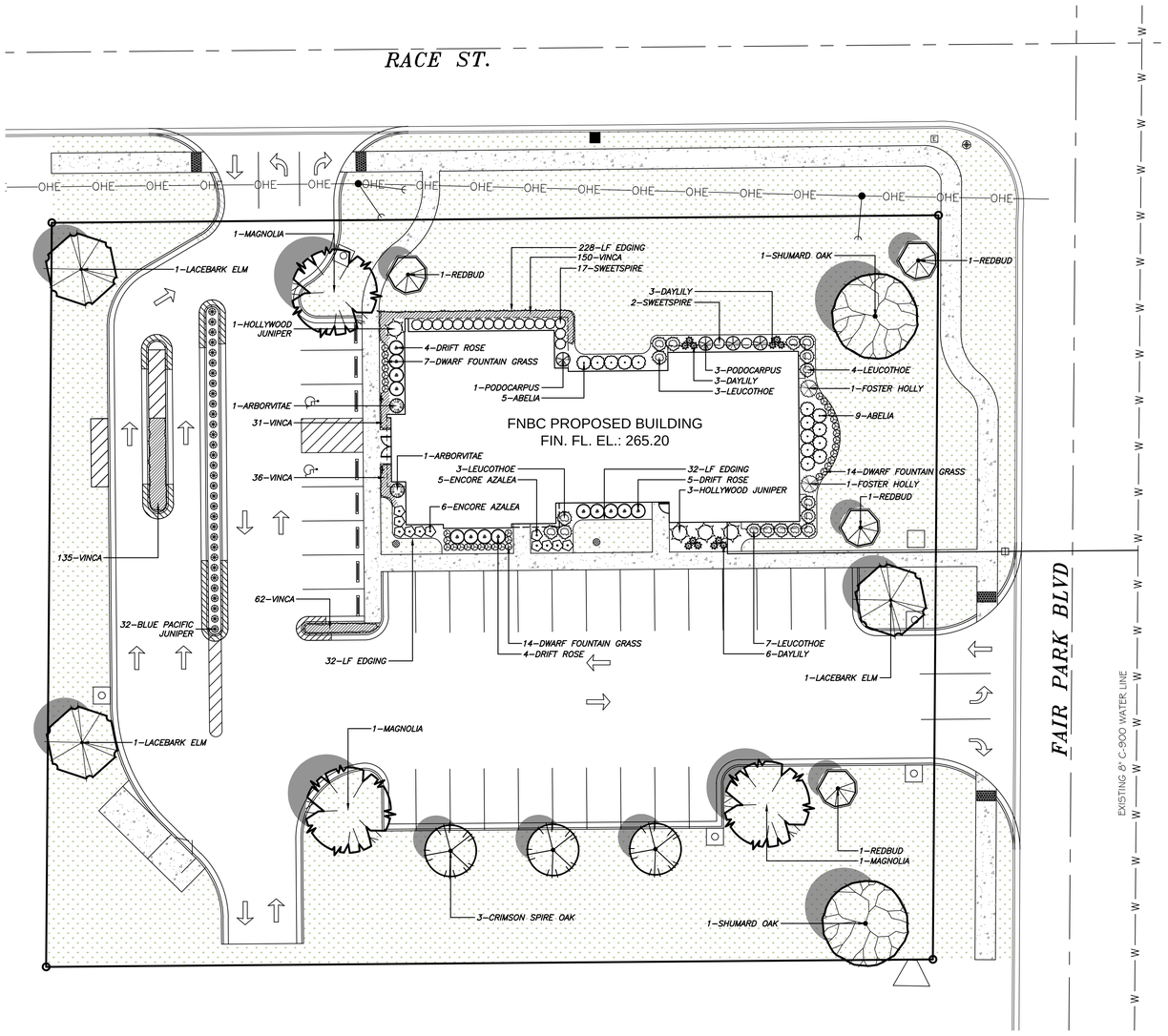


## GENERAL LANDSCAPE NOTES:

1. LANDSCAPE CONTRACTOR IS RESPONSIBLE FOR VERIFICATION OF ALL PLANT QUANTITIES.
2. LANDSCAPE CONTRACTOR IS RESPONSIBLE FOR CALCULATION OF ALL GRASS AND MULCH AREAS. VERIFY LOCATIONS WITH OWNER.
3. ADJUSTMENTS IN ACTUAL LOCATION OF PLANT MATERIAL MAY BE NECESSARY DUE TO EXISTING FIELD ITEMS (AIR CONDITIONERS, TRANSFORMERS, ETC.).
4. FULL BED PREPARATION TYPICAL. REFERENCE PLANTING DETAILS.
5. LANDSCAPE CONTRACTOR TO PROVIDE A UNIT COST (INCLUDING INSTALLATION) FOR ALL ITEMS.
6. WHEN THE SAME SPECIES OF TREES ARE PAIRED OR GROUPED IN 3 OR MORE, THEY SHOULD BE MATCHED IN SIZE, SHAPE, GROWTH CHARACTERISTICS, ETC.
7. PLANT MATERIAL AVAILABILITY SHALL BE CONFIRMED BY LANDSCAPE CONTRACTOR PRIOR TO BIDDING. SHOULD SPECIFIED MATERIAL NOT BE AVAILABLE, THE OWNER AND LANDSCAPE ARCHITECT SHALL BE NOTIFIED PRIOR TO BID DATE.
8. VERIFY LOCATION OF ALL UTILITY LINES PRIOR TO INSTALLATION. FIELD ADJUST FOR GENERAL INTENT IF CONFLICT EXISTS.
9. THE LANDSCAPE CONTRACTOR SHALL NOT ELIMINATE, SUBSTITUTE, AND/OR DOWNSIZE PLANT MATERIAL WITHOUT PRIOR APPROVAL OF THE OWNER AND LANDSCAPE ARCHITECT. MINIMUM STANDARDS AND REQUIREMENTS OF THE CITY OF JONESBORO MUST BE MAINTAINED.
10. ALL PLANTING BEDS AND TREES, UNLESS OTHERWISE NOTED ON THE PLAN, TO RECEIVE 3 INCHES OF HARDWOOD MULCH TYPICAL.
11. ALL PLANT MATERIALS SHALL BE MAINTAINED BY OWNER IN A HEALTHY AND GROWING CONDITION, AND BE REPLACED WITH PLANT MATERIAL OF SIMILAR VARIETY AND SIZE IF DAMAGED, DESTROYED, OR REMOVED (SEE WARRANTY INFORMATION).
12. LANDSCAPE AREAS SHALL BE KEPT FREE OF TRASH, LITTER, WEEDS, AND OTHER MATERIAL OR PLANTS NOT A PART OF THE LANDSCAPING.
13. ALL LANDSCAPE AREAS SHALL BE CONSTRUCTED, INSTALLED, AND MAINTAINED SO AS NOT TO CONSTRUCT VIEW OF MOTORISTS BETWEEN THE STREET AND THE ACCESS DRIVES. VISIBILITY TRIANGLES SHALL ALWAYS REMAIN UNOBSTRUCTED.
14. ALL PERMEABLE SURFACES NOT OCCUPIED BY TREES, SHRUBS, PLANTING BEDS, EXISTING GRASS, SIGNS, AND OTHER PERMITTED ITEMS OR FIXTURES SHALL BE LAWN AREAS. THESE LAWN AREAS, UNLESS SPECIFIED OTHERWISE, SHALL BE ZOYSIA SOD.
15. PLANT MATERIAL SHALL BE HEALTHY AND VIGOROUS, FULL BRANCHED ON ALL SIDES, WELL SHAPED SYMMETRICAL AND SHALL BE FREE OF DEFECTS, DECAY, SUN–SCALD INJURIES, ABRASIONS OF THE BARK AND LIMBS, DISEASE, INSECT EGGS AND LARVA.
16. THE OWNER OR LANDSCAPE ARCHITECT HAS THE RIGHT TO INSPECT ALL MATERIALS PRIOR TO AND AFTER DELIVERY TO THE SITE AS WELL AS AFTER INSTALLATION AND SHALL RESERVE THE RIGHT TO ACCEPT OR REJECT SAID MATERIALS AT ANY TIME.
17. CONTRACTOR TO INSTALL AN UNDERGROUND POP–UP TYPE IRRIGATION SYSTEM. IRRIGATION SYSTEM SHALL WATER ALL LANDSCAPE PLANTING AND LAWN AREAS. ADJUSTMENTS TO THE SYSTEM SHALL LIMIT OVERSPRAY ONTO ADJACENT ROADWAYS AND CONSERVE WATER TO THE GREATEST EXTENT POSSIBLE. IRRIGATION CONTRACTOR TO COORDINATE WITH CIVIL ENGINEER AND SITE CONTRACTOR FOR LOCATION OF SLEEVING FOR IRRIGATION SYSTEM.
18. TOPSOIL SHALL BE FERTILE NATURAL SURFACE SOIL, UNIFORM IN COMPOSITION, SIMILAR TO SITE TOPSOIL IF APPROVED, FREE OF STONES LUMPS WEEDS, AND ROOTS. MINIMUM 20 PERCENT ORGANIC MATTER, 50 TO 50 PERCENT SAND, 15–20 PERCENT CLAY.
19. THERE SHALL BE A 3 INCH MINIMUM LAYER OF GOOD TOPSOIL IN ALL GRASS AREAS. GRADE AREAS AROUND SIDEWALKS AND CURBS 1 INCH BELOW TOP OF CONCRETE TO ALLOW FOR SOD THICKNESS.
20. TOPSOIL IN PLANTING BEDS TO BE MOUNDED AND GRADED IN A WAY TO ALLOW POSITIVE DRAINAGE AWAY FROM BUILDING AND TO DETER ANY PONDING.
21. REFERENCE CIVIL ENGINEER PLANS FOR GRADING AND DRAINAGE.

## PLANT MATERIALS LIST:

| COMMON NAME | SCIENTIFIC NAME | QUAN. | SIZE | REMARKS |
|---|---|---|---|---|
| Redbud | Cercis canadensis | 4 | 2.5" cal. / 8' ht. | B&B, Single Trunk, Full Crown |
| Magnolia | Magnolia grandiflora | 3 | 2.5" cal. / 8' ht. | B&B, Single Trunk, Full Crown |
| Shumard Oak | Quercus shumardii | 1 | 2.5" cal. / 8' ht. | B&B, Single Trunk, Full Crown |
| Crimson Spire Oak | Quercus x 'Crimson Spire' | 3 | 2.5" cal. / 8' ht. | B&B, Single Trunk, Full Crown |
| Lacebark Elm | Ulmus parvifolia | 3 | 2.5" cal. / 8' ht. | B&B, Single Trunk, Full Crown |
| **SHRUBS** | | | | |
| Abelia | Abelia x grandiflora 'Little Richard' | 14 | 5 gal. | Full |
| Foster Holly | Ilex x attenuata 'Fosteri' | 2 | 7 gal. | Full, Speciman |
| Sweetspire | Itea virginica 'Sprich' | 19 | 5 gal. | Full |
| Hollywood Juniper | Juniperus chinensis 'Torulosa' | 4 | 7 gal. | Full, Speciman |
| Blue Pacific Juniper | Juniperus conferta 'Blue Pacific' | 32 | 3 gal. | Full |
| Coast Leucothoe | Leucothoe axillaris | 17 | 5 gal. | Full |
| Fountain Grass | Pennisetum alopecuroides 'Hameln' | 35 | 5 gal. | Full |
| Yew Podocarpus | Podocarpus macrophyllus | 4 | 7 gal. | Full, Speciman |
| Encore Azalea | Rhododendron 'Conlea' | 11 | 5 gal. | Full |
| Drift Rose | Rosa 'Meidrifora' | 13 | 5 gal. | Full |
| Arborvitae | Thuja occidentalis 'Smaragd' | 2 | 7 gal. | Full, Speciman |
| **MISCELLANEOUS** | | | | |
| Daylily | Hemerocallis x 'Stella de Oro' | 12 | 1 gal. | Full |
| Vinca | Vinca minor | 415 | 4" pots | Full, 12" o.c. |
| **MISCELLANEOUS** | | | | |
| Steel Edging | | 292 | LF | |
| Turf Area | | 3,222 | SY | |

## WARRANTY:

ALL WORK IS WARRANTED FOR (1) FULL YEAR AFTER INITIAL ACCEPTANCE. THE LANDSCAPE CONTRACTOR IS OBLIGATED TO CORRECT ANY WORK FOUND TO BE DEFECTIVE OR NONCONFORMING. UPON NOTICE, REMOVE DEAD MATERIALS AND ALL MATERIALS NOT IN VIGOROUS, THRIVING CONDITION, AS SOON AS WEATHER PERMITS AND ON NOTIFICATION BY THE LANDSCAPE ARCHITECT OR OWNER. PLANTS, INCLUDING TREES, WHICH HAVE PARTIALLY DIED SO THAT SHAPE, SIZE OR SYMMETRY HAS BEEN DAMAGED, SHALL BE CONSIDERED FOR REPLACEMENT. IN SUCH CASES, THE OPINION OF THE LANDSCAPE ARCHITECT WILL BE FINAL. ANNUAL PLANTS WILL BE GUARANTEED FOR A PERIOD COINCIDING WITH THEIR NORMAL SEASON OF GROWTH. PLANTS USED FOR REPLACEMENT SHALL BE OF THE SAME KIND AND SIZE AS THOSE ORIGINALLY PLANTED, AND SHALL BE PLANTED AS ORIGINALLY SPECIFIED. ALL WORK, INCLUDING MATERIALS, LABOR, AND EQUIPMENT USED IN REPLACEMENT, WILL BE AT NO COST TO THE OWNER. REPLACEMENT PLANTS SHALL CARRY A ONE (1) YEAR WARRANTY. ANY DAMAGE, INCLUDING RUTS IN LAWN OR BED AREAS, INCURRED IN MAKING REPLACEMENTS SHALL BE REPAIRED TO THE SATISFACTION OF THE OWNER OR LANDSCAPE ARCHITECT BY THE LANDSCAPE CONTRACTOR.

## TABULATION:

| | | |
|---|---|---|
| **TOTAL LAND AREA = 1.30 ac. (56,620 sf)** | | |
| Required Trees / Shrubs | 56,620 / 1000 = | 56.62 (57) |
| Total Provided | | **101** |
| Required Trees | 57 x 25% = | 14.25 |
| Provided 2.5" cal. Trees | | **15** |
| | | **12 native - 80.0%** |
| | | **3 evergreen - 20.0%** |
| Provided 5 gal. (min.) Shurbs | | **86** |

FOR UNDERGROUND UTILITY LOCATIONS
CALL: THE ARKANSAS ONE-CALL SYSTEM
GIVE 48 HOURS NOTICE BEFORE CONSTRUCTION BEGINS

NOTE:
UNDERGROUND FACILITIES, STRUCTURES, AND UTILITIES HAVE BEEN PLOTTED FROM AVAILABLE SURVEYS AND RECORDS. THEIR LOCATIONS MUST BE CONSIDERED APPROXIMATE ONLY. THERE MAY BE OTHERS. THE EXISTENCE AND LOCATIONS OF WHICH ARE UNKNOWN. THE CONTRACTOR MUST VERIFY THE EXACT LOCATIONS OF UTILITIES WITH THE UTILITY COMPANIES PRIOR TO CONSTRUCTION.

CERTIFICATE OF AUTHORIZATION — WHITLOW ENGINEERING SERVICES, INC. — No. 1342 — ARKANSAS ENGINEER

LICENSED LANDSCAPE ARCHITECT — RICHARD S. STAFFORD — License Number 5106 — STATE OF ARKANSAS

CERTIFICATE OF ACCURACY:
I, RICHARD S. STAFFORD, HEREBY CERTIFY THAT THIS PLAN CORRECTLY REPRESENTS A PLAN MADE BY ME, OR UNDER MY SUPERVISION.

03/04/20 — DATE

Richard Stafford

RICHARD S. STAFFORD, ASLA
LICENSED LANDSCAPE ARCHITECT
ARKANSAS LICENSE NO. 5106


WHITLOW ENGINEERING SERVICES, INC.
301 EAST LINCOLN AVE #2
SEARCY, ARKANSAS 72143
(501) 279-9200 • (501) 279-9205 FAX


Sheet No. 6 of 9

Job No. 20–093 | County Craighead

Date 03/04/20 | Scale 1"=20' | Township 14N | Range 04E | Section 28 | Drawn by: RSS | Checked by: RSS

ONLY COPIES WITH VIOLET COLORED SIGNATURE ARE ORIGINAL CIVILOGIC COPIES

© 2019, Civilogic


Civilogic
ENGINEERS PLANNERS SURVEYORS
203 Southwest Dr.–Jonesboro, AR–(870)932–7880–www.civilogic.net


REVISIONS

| REV. | DESCRIPTION | ISSUED BY: |
|---|---|---|
| 1 | LAKE 09/08/20 | |

# LANDSCAPE PLAN
2631 RACE ST.
JONESBORO, ARKANSAS
FOR
FNBC COMMUNITY BANKERS

JOB NO.: 119096
SHEET NUMBER
6 of 9

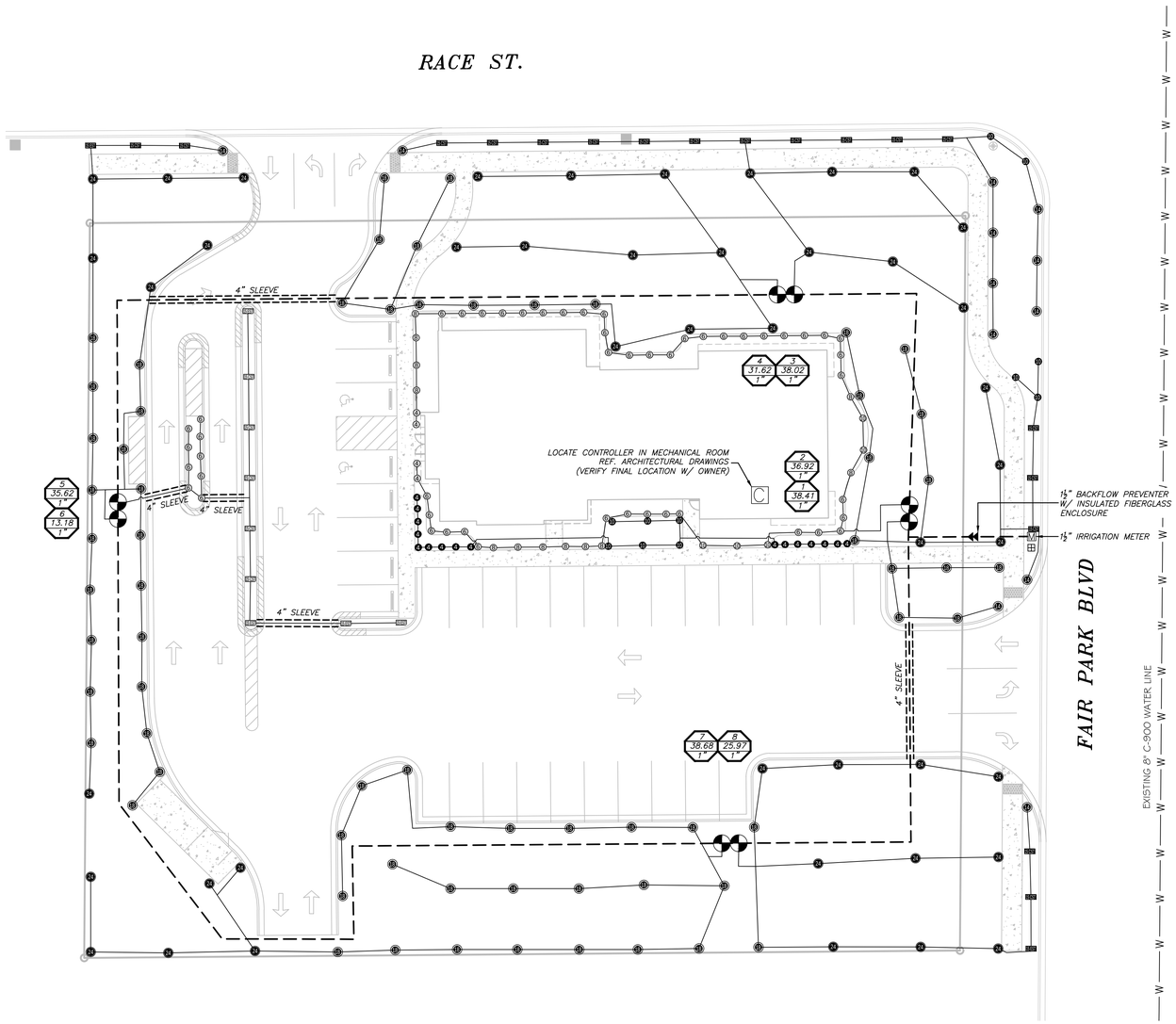


*IRRIGATION LEGEND:*

| | | |
|---|---|---|
| | | 2" MAINLINE (CLASS 200 PVC) |
| | | LATERAL LINE (CLASS 200 PVC) |
| | | SLEEVE (CLASS 200 PVC) – REF. PLAN FOR SIZING |
| 1 | M | 1½" IRRIGATION METER @ 90± PSI |
| 1 | | WILKINS 1½" #975XL BACKFLOW PREVENTER ASSEMBLY W/ INSULATED FIBERGLASS ENCLOSURE (OR EQUAL) |
| 1 | C | RAIN BIRD ESP–ME3 CONTROLLER (OR EQUAL) |
| 1 | | HUNTER MINICLICK – AUTO RAIN SHUTOFF SENSOR (OR EQUAL) |
| 1 | | HUNTER FREEZECLICK – AUTO FREEZE SHUTOFF SENSOR (OR EQUAL) |
| 8 | | RAIN BIRD PGA ZONE VALVE / FLOW CONTROL – REF. PLAN FOR SIZE |
| 4 | 4 | RAIN BIRD 1812–PRS POP–UP SHRUB SPRAY 4–VAN |
| 50 | 6 | RAIN BIRD 1812–PRS POP–UP SHRUB SPRAY 6–VAN |
| 12 | 8 | RAIN BIRD 1812–PRS POP–UP SHRUB SPRAY 8–HE–VAN |
| 5 | 10 | RAIN BIRD 1812–PRS POP–UP SHRUB SPRAY 10–HE–VAN |
| 5 | CST | RAIN BIRD 1812–PRS POP–UP SHRUB SPRAY 15–CST |
| 4 | EST | RAIN BIRD 1812–PRS POP–UP SHRUB SPRAY 15–EST |
| 16 | 4 | RAIN BIRD 1804–PRS POP–UP TURF SPRAY 4–VAN |
| 11 | 10 | RAIN BIRD 1804–PRS POP–UP TURF SPRAY 10–HE–VAN |
| 12 | R4 | RAIN BIRD 1804–PRS POP–UP TURF SPRAY R–VAN14 |
| 66 | R8 | RAIN BIRD 1804–PRS POP–UP TURF SPRAY R–VAN18 |
| 44 | R4 | RAIN BIRD 1804–PRS POP–UP TURF SPRAY R–VAN1724 |
| 18 | CST | RAIN BIRD 1804–PRS POP–UP TURF SPRAY 15–CST |
| 2 | EST | RAIN BIRD 1804–PRS POP–UP TURF SPRAY 15–EST |

1 – CONTROLLER STATION NUMBER
40.0 – LATERAL DISCHARGE IN GPM
1" – VALVE SIZE IN INCHES

*GENERAL IRRIGATION NOTES:*

1. CONTRACTOR SHALL INSTALL ALL EQUIPMENT PER MANUFACTURERS SPECIFICATIONS AND RECOMMENDATIONS.
2. LOCATE ALL UTILITIES PRIOR TO CONSTRUCTION. FIELD ADJUST AS NECESSARY WHILE MAINTAINING PROPER WATER COVERAGE.
3. CONTRACTOR SHALL BE RESPONSIBLE FOR DAMAGES CAUSED TO ALL UTILITIES (BOTH UNDERGROUND AND OVERHEAD) DURING THE IRRIGATION INSTALLATION.
4. THE IRRIGATION DESIGN IS DIAGRAMMATIC. THE INTENT OF THE DRAWING IS TO SHOW THE GENERAL LAYOUT OF THE SYSTEM. SCALE MAY NOT BE ACCURATE. ACTUAL LOCATIONS AND QUANTITIES OF PIPE AND FITTINGS MAY VARY DUE TO FIELD ADJUSTMENTS FOR EXISTING CONDITIONS AND OTHER OBSTRUCTIONS.
5. ALL PVC MAINLINE AND LATERAL PIPING SHALL BE PVC CLASS 200. ALL PVC FITTINGS SHALL BE SCH40 PVC TYPE 1.
6. ALL SLEEVING SHALL BE INSTALLED BY THE GENERAL CONTRACTOR.
7. ALL SLEEVING TO BE BURIED A MINIMUM OF 18 INCHES AND A MAXIMUM OF 24 INCHES BELOW THE FINISHED GRADE. ENDS OF SLEEVES SHALL EXTEND 12 INCHES PAST THE EDGES OF ALL PAVING AND CURBS AND BE CLEARLY MARKED FOR FUTURE USE BY THE IRRIGATION SUBCONTRACTOR.
8. ADJUST ALL SPRINKLER HEADS TO MINIMIZE OVERSPRAY ONTO ADJACENT PROPERTY, SIDEWALKS, ROADWAYS, AND BUILDINGS AND TO CONSERVE WATER TO THE GREATEST EXTENT POSSIBLE.
9. ALL MAINLINES SHALL BE PRESSURE TESTED PRIOR TO BACKFILLING TRENCHES.
10. ALL LINES SHALL BE PRESSURE TESTED PRIOR TO BACKFILLING TRENCHES.
11. NO ROCKS OR OTHER EXTRANEOUS MATERIALS MAY BE USED IN BACKFILL OPERATIONS.
12. CONTRACTOR SHALL VERIFY THAT THERE IS ADEQUATE PRESSURE AND SUPPLY TO MEET THE DEMANDS SPECIFIED BY THE SPRINKLER MANUFACTURER.

CALL BEFORE YOU DIG – ARKANSAS ONE CALL SYSTEM

***FOR UNDERGROUND UTILITY LOCATIONS***
***CALL: THE ARKANSAS ONE-CALL SYSTEM***
***GIVE 48 HOURS NOTICE BEFORE CONSTRUCTION BEGINS***

***NOTE:***
***UNDERGROUND FACILITIES, STRUCTURES, AND UTILITIES HAVE BEEN PLOTTED FROM AVAILABLE SURVEYS AND RECORDS. THEIR LOCATIONS MUST BE CONSIDERED APPROXIMATE ONLY. THERE MAY BE OTHERS, THE EXISTENCE AND LOCATIONS OF WHICH ARE UNKNOWN. THE CONTRACTOR MUST VERIFY THE EXACT LOCATIONS OF UTILITIES WITH THE UTILITY COMPANIES PRIOR TO CONSTRUCTION.***

CERTIFICATE OF AUTHORIZATION – WHITLOW ENGINEERING SERVICES, INC. – No. 1342 – ARKANSAS ENGINEER

LICENSED LANDSCAPE ARCHITECT – RICHARD S. STAFFORD – License Number 5106 – STATE OF ARKANSAS

*CERTIFICATE OF ACCURACY:*

*I, RICHARD S. STAFFORD, HEREBY CERTIFY THAT THIS PLAN CORRECTLY REPRESENTS A PLAN MADE BY ME, OR UNDER MY SUPERVISION.*

*03/04/20*
*DATE*

*RICHARD S. STAFFORD, ASLA*
*LICENSED LANDSCAPE ARCHITECT*
*ARKANSAS LICENSE NO. 5106*


WHITLOW ENGINEERING SERVICES, INC.
***301 EAST LINCOLN AVE #2***
***SEARCY, ARKANSAS 72143***
***(501) 279-9200 • (501) 279-9205 FAX***


| | |
|---|---|
| Date | 03/04/20 |
| Scale | 1"=20' |
| Job No. | 20–093 |
| Sheet No. | 7 of 9 |
| Section | 28 |
| Township | 14N |
| Range | 04E |
| County | Craighead |
| Drawn By: | RSS |
| Checked by: | RSS |

ONLY COPIES WITH VIOLET COLORED SIGNATURE ARE ORIGINAL CIVILOGIC COPIES


© 2019, Civilogic



ENGINEERS PLANNERS SURVEYORS
Civilogic
203 Southwest Dr.–Jonesboro, AR–(870)932–7880–www.civilogic.net


REVISIONS

| DATE | REV. DESCRIPTION | ISSUED BY: |
|---|---|---|
| 06/30/20 | | |

# LANDSCAPE PLAN
## 2631 RACE ST.
## JONESBORO, ARKANSAS
## FOR
## FNBC COMMUNITY BANKERS

JOB NO.: 119096
SHEET NUMBER
7 of 9

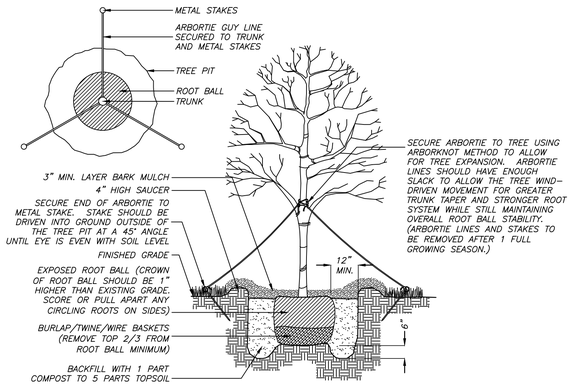


DETAIL - TREE PLANTING
SCALE - NTS

1

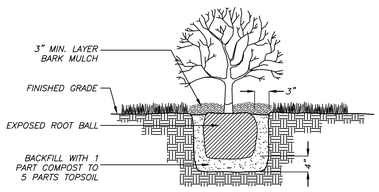


DETAIL - SHRUB PLANTING
SCALE - NTS

2

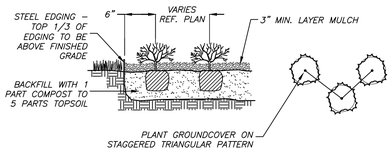


DETAIL - GROUNDCOVER PLANTING
SCALE - NTS

3

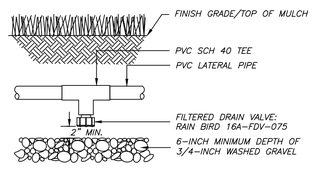


DETAIL - LATERAL DRAIN
SCALE - NTS

4

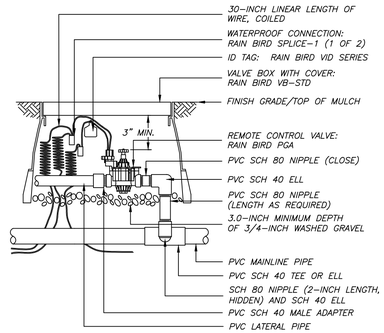


DETAIL - CONTROL VALVE
SCALE - NTS

5

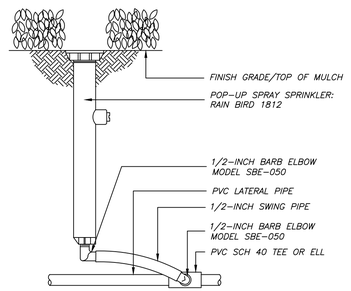


DETAIL - SHRUB SPRAY
SCALE - NTS

6

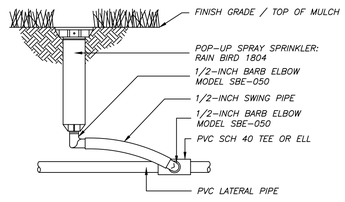


DETAIL - TURF SPRAY
SCALE - NTS

7

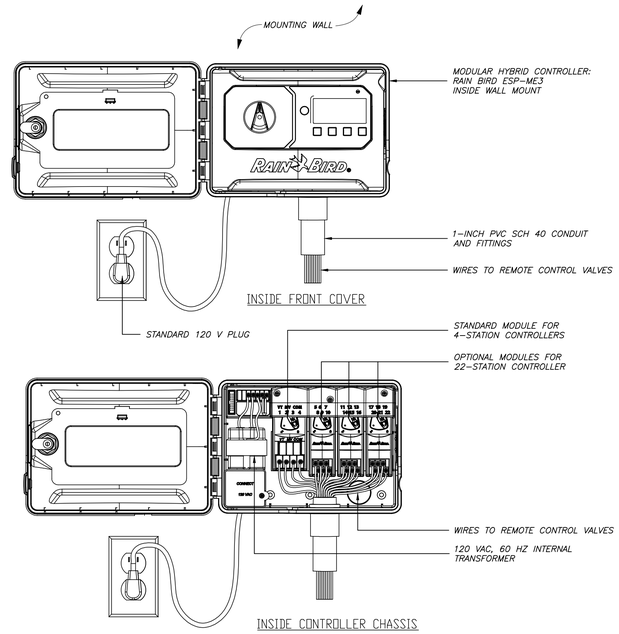


DETAIL - TURF SPRAY
SCALE - NTS

8

CERTIFICATE OF AUTHORIZATION
WHITLOW ENGINEERING SERVICES, INC.
No. 1342
ARKANSAS ENGINEER

LICENSED LANDSCAPE ARCHITECT
RICHARD S. STAFFORD
License Number 5106
STATE OF ARKANSAS

CERTIFICATE OF ACCURACY:

I, RICHARD S. STAFFORD, HEREBY CERTIFY THAT THIS PLAN CORRECTLY REPRESENTS A PLAN MADE BY ME, OR UNDER MY SUPERVISION.

03/04/20
DATE

Richard Stafford
RICHARD S. STAFFORD, ASLA
LICENSED LANDSCAPE ARCHITECT
ARKANSAS LICENSE NO. 5106

WHITLOW ENGINEERING SERVICES, INC.
301 EAST LINCOLN AVE #2
SEARCY, ARKANSAS 72143
(501) 279-9200 • (501) 279-9205 FAX

Sheet No. 8 of 9
Job No. 20-093
Scale 1"=20'
Date 03/04/20
County Craighead
Range 04E
Township 14N
Section 28
Drawn by: RSS
Checked by: RSS

ONLY COPIES WITH VIOLET COLORED SIGNATURE ARE ORIGINAL CIVILOGIC COPIES
© 2019, Civilogic

ENGINEERS PLANNERS SURVEYORS
Civilogic
203 Southwest Dr.-Jonesboro, AR-(870)932-7880-www.civilogic.net

REVISIONS
NO. DESCRIPTION DATE ISSUED BY:

LANDSCAPE PLAN
2631 RACE ST.
JONESBORO, ARKANSAS
FOR
FNBC COMMUNITY BANKERS

JOB NO.: 119096
SHEET NUMBER
8 of 9

# DRIVING SURFACE SECTIONS

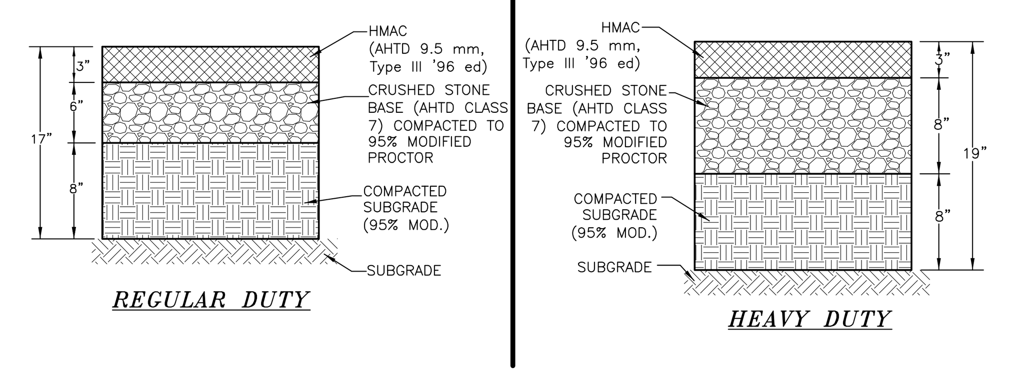


FLEXIBLE PAVEMENT STRUCTURE

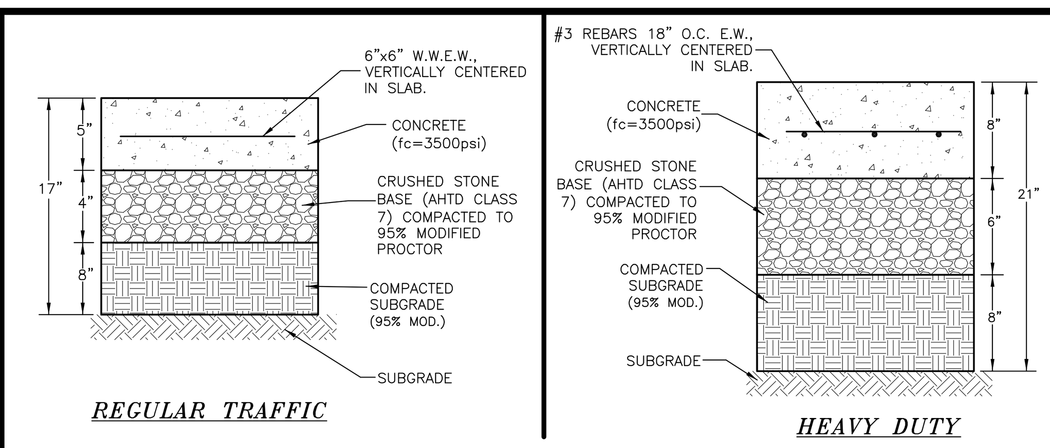


RECOMMENDED RIGID PAVEMENT STRUCTURE

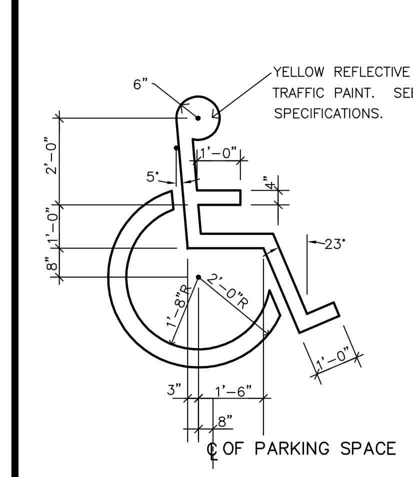


HDCP SYMBOL

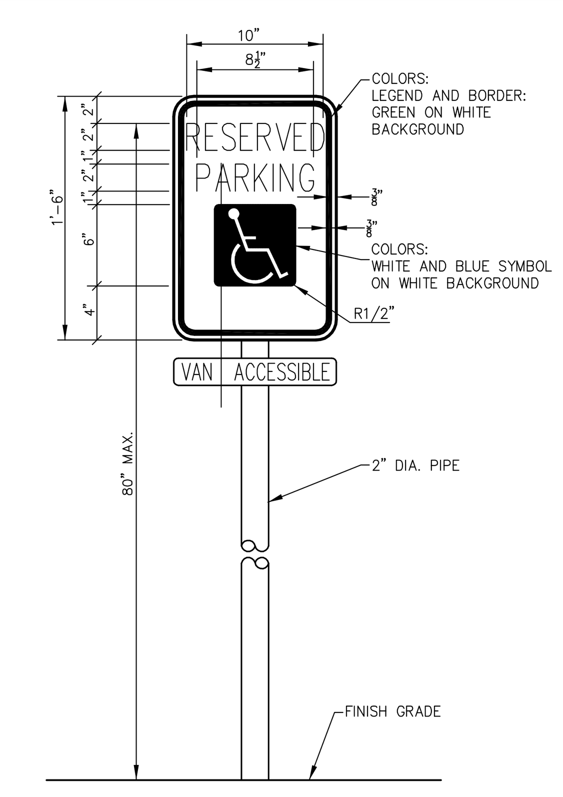


HC PARKING SIGN

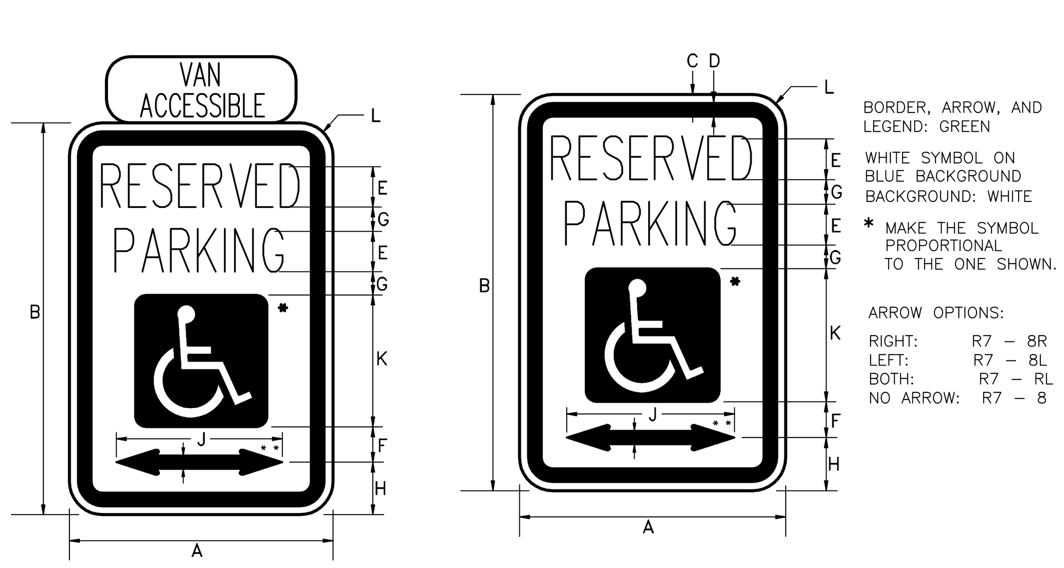


| ROAD CLASS | A | B | C | D | E | F | G | H | J | K | L | M | N |
|---|---|---|---|---|---|---|---|---|---|---|---|---|---|
| | DIMENSIONS (inches) | | | | | | | | | | | | |
| CONV & MIN | 12 | 18 | 0.38 | 0.63 | 2C | 1.5 | 1 | 2.5 | 7.75 | 6 | 1.5 | 0.75 | 1.75 |

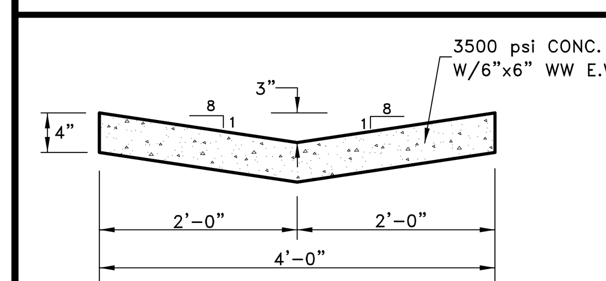


CONCRETE SWALE

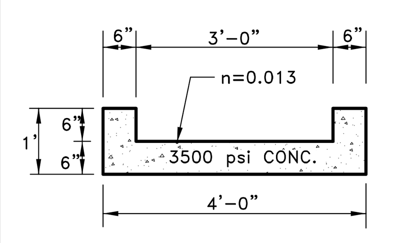


FLUME DETAIL

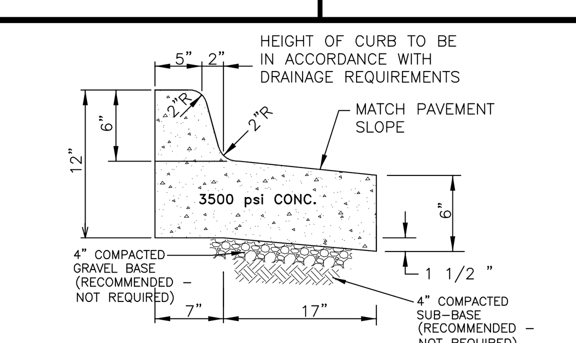


"DUMP CURB"

TYPE "A" (BARRIER) RESIDENTIAL & COLLECTOR ARTERIAL STREETS

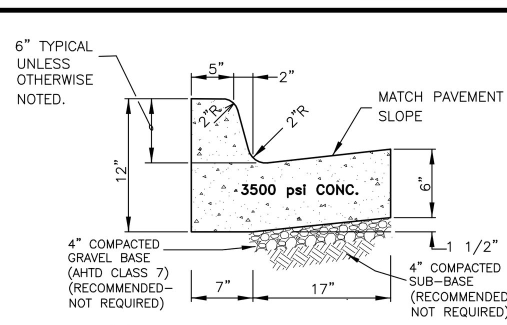


TYPE "A" (BARRIER) RESIDENTIAL & COLLECTOR STREETS

NOTE: CONTRACTION AND EXPANSION JOINTS SHALL BE CONSTRUCTED IN ACCORDANCE WITH THE PLANS AND SPECIFICATIONS.

CURB NOTE:
EXPANSION JOINTS: Shall be placed at all driveway radii, intersection radii, and all permanent stationary structures. Preformed expansion joint filler shall be of non extruding type and conform to ASTM Designation D1751 or AASHTO M153. Acceptable materials may be found on the current AHTD "Qualified Products List". Material shall completely separate concrete the full width and depth of the curb and gutter section.
CONTRACTION JOINTS: Contraction joints shall be saw cut with a maximum spacing of fifteen (15') feet. All joints shall be cut to a minimum depth of twenty-five percent (25%) of the thickness of the curb section.

COMBINATION CURB AND GUTTER

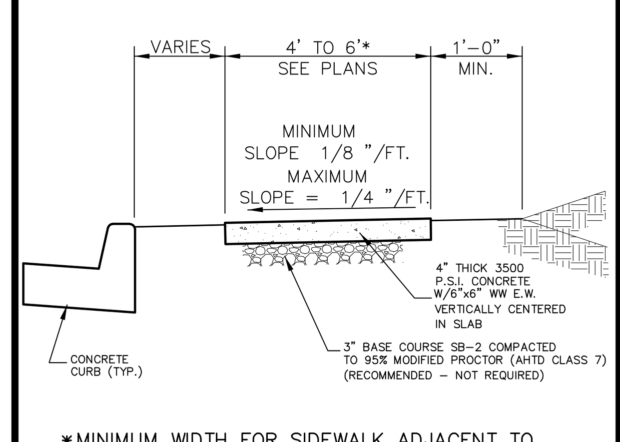


*MINIMUM WIDTH FOR SIDEWALK ADJACENT TO CURB IS 5' FOR

CITY STREETS AND 6' FOR STATE OR U.S. HIGHWAYS.

TYPICAL SECTION – SIDEWALK

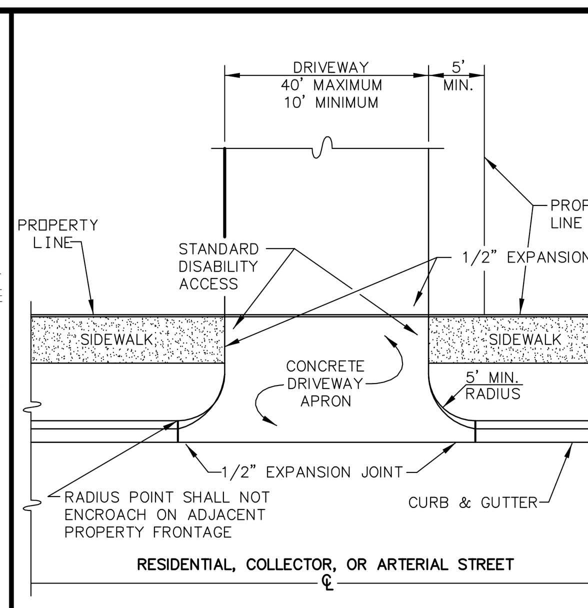


DRIVEWAY TURNOUT

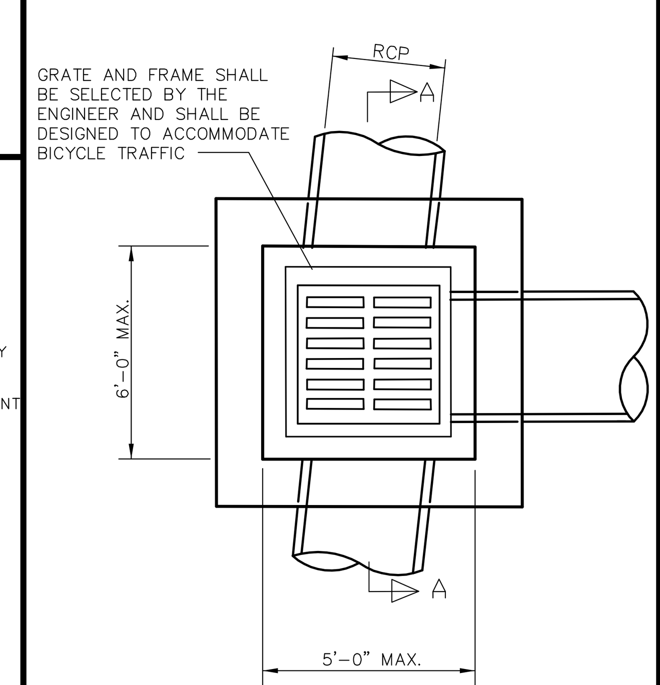


GRATED INLET

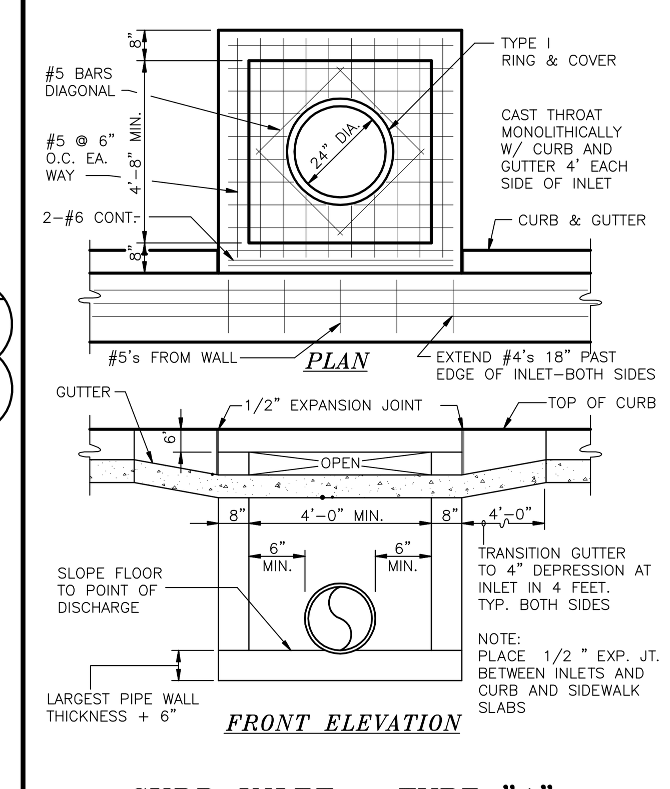


CURB INLET – TYPE "A"

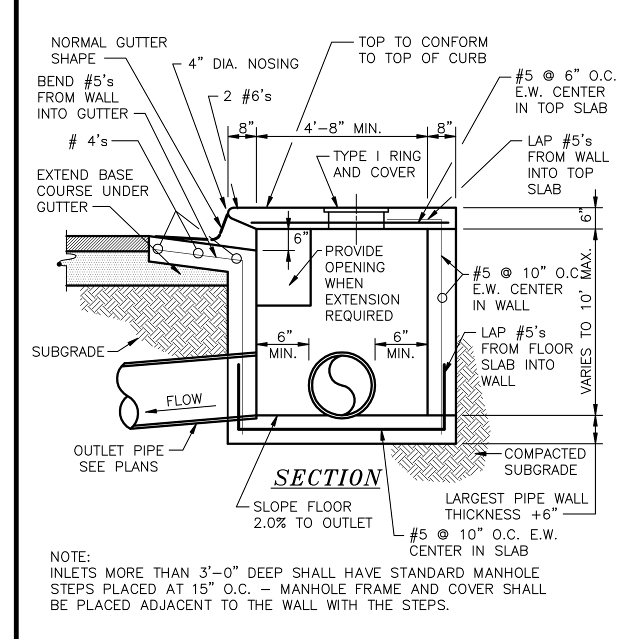


NOTE:
INLETS MORE THAN 3'-0" DEEP SHALL HAVE STANDARD MANHOLE STEPS PLACED AT 15" O.C. – MANHOLE FRAME AND COVER SHALL BE PLACED ADJACENT TO THE WALL WITH THE STEPS.

SECTION – TYPICAL
CURB INLET – TYPE "A"

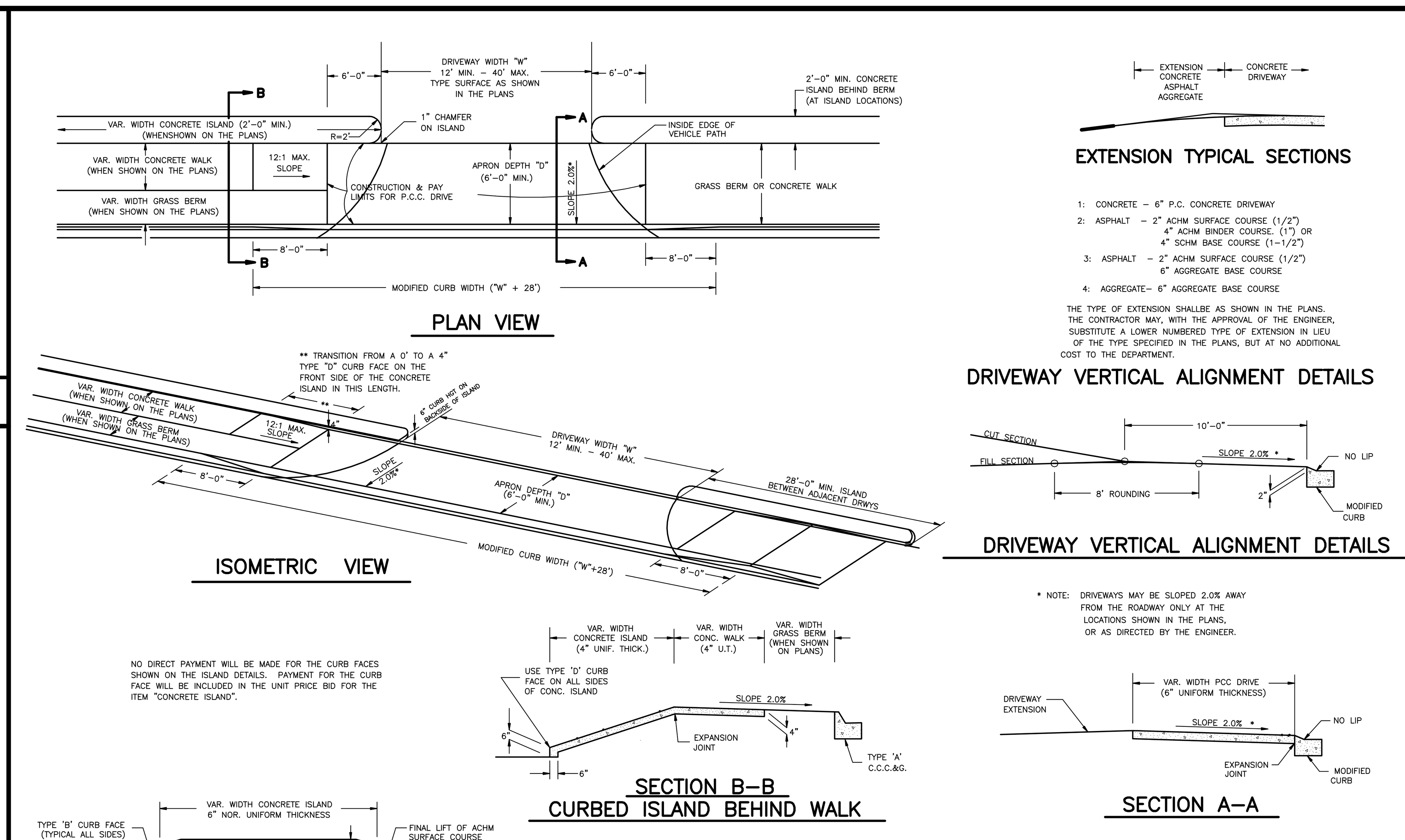


| DATE | REV | DATE FILMED | DESCRIPTION |
|---|---|---|---|
| 8-22-02 | | | ADDED ISLAND DETAILS & NOTES |
| 3-30-00 | | | REV. MOD. CURB WIDTH & TRANS. NOTE |
| 11-19-98 | | | REVISED NOTES |
| 11-18-98 | | | REDRAWN AND REISSUED |

ARKANSAS STATE HIGHWAY COMMISSION
DETAILS OF DRIVEWAYS & ISLANDS
STANDARD DRAWING DR-1

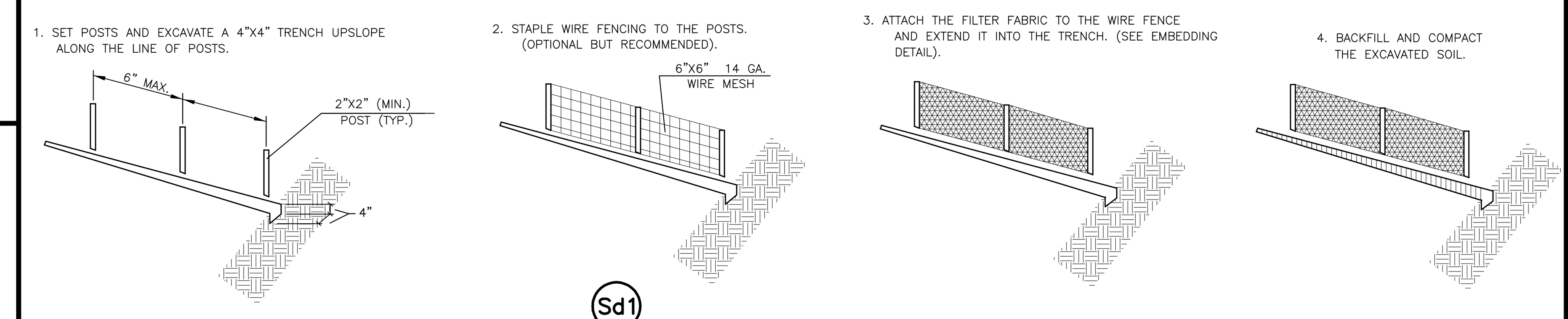


CONSTRUCTION OF A SILT FENCE

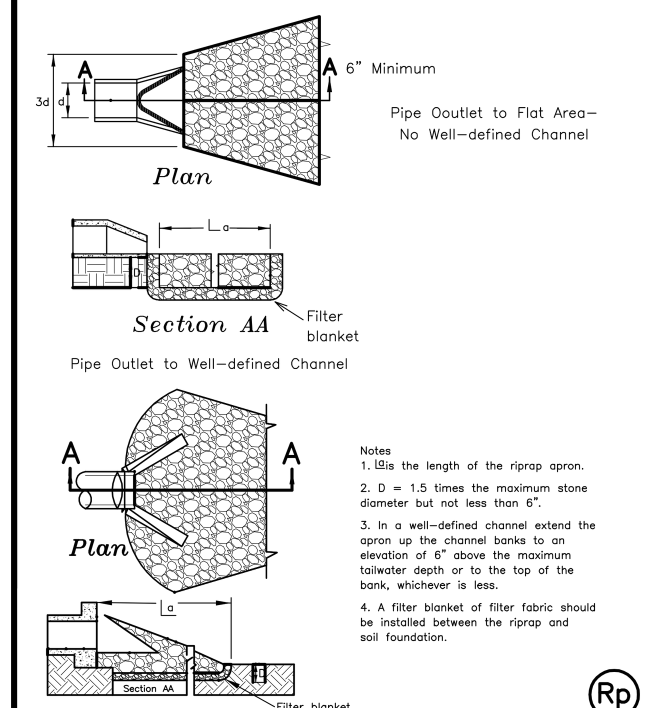


Storm Drain Outlet Protection

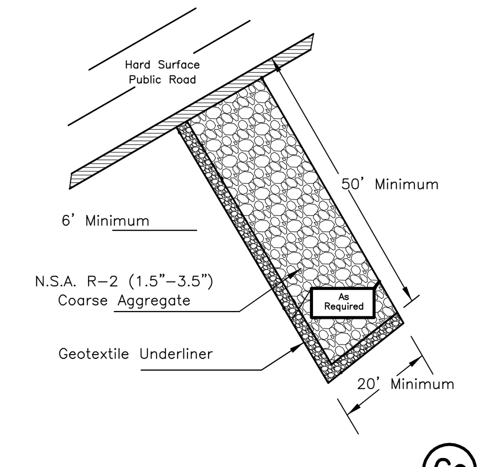


CRUSHED STONE CONSTRUCTION ENTRANCE

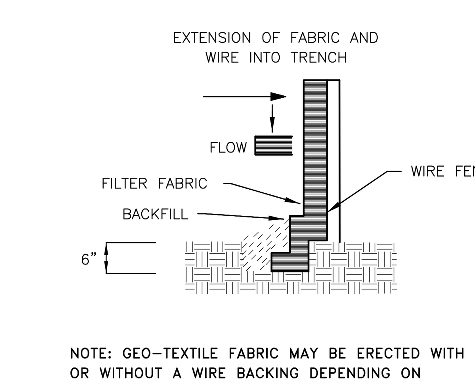


NOTE: GEO-TEXTILE FABRIC MAY BE ERECTED WITH OR WITHOUT A WIRE BACKING DEPENDING ON SITE CONDITIONS.

EMDEDDING DETAIL

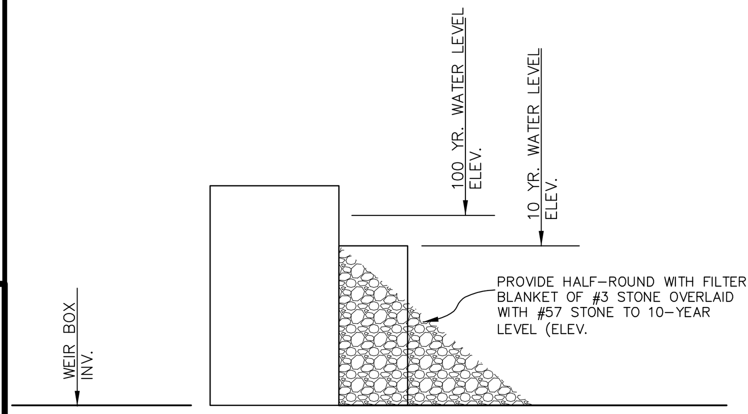


DETAIL: SILT FILTER AT OUTLET
N.T.S.

SITE DEVELOPMENT PLAN CHECKLIST NOTATIONS:

1) This is a Site Development Plan for a proposed Bank building on Lot 7 of FNBC Minor Plat.
2) Property Address: 2631 Race St., Jonesboro, AR
3) A location Map is included on the plan.
4) FNBC Community Bankers
address
address
phone
5) A north arrow is shown on the drawing.
6) This plan scale is 1" =20'.
7) This site lies in the City of Jonesboro, Craighead County, AR.
8) The date of the preparation of these plans is 02-24-2020.
9) This property is currently Zoned Commercial C-2.
10) ENGINEER/SURVEYOR:
Civilogic
203 Southwest Drive
Jonesboro, AR 72401
870) 932-7880 (phone)
870) 972-9662 (fax)
email: george@civilogic.net
11) The seal and signature of George Hamman, AR PE #7880, are included on the drawing.
12) SITE AREA = 56,620 SF = 1.30 acres.
Boundary information provided by Civilogic.
13) Building Setbacks:
Front, from Right-of-way: 25'
Side: 10'
Rear: 20'
No other restrictions are known, nor were provided, other than as shown.
14) This tract does not lie within the 100-yr Flood Plain per Flood Insurance Rate Map of Craighead County, Arkansas and Incorporated Areas, Community Panel Numbers 05031C0132 C, dated 09-27-91. This tract does lie within a Zone "X" Flood Plain per the map referenced above.
15) The existing land contours shown were derived from City of Jonesboro topographic information and ground-run topographic verification by Civilogic, in (October, 2019).
16) The adjoining properties are shown on this plan.
17) The length of the site boundaries are shown.
18) The bearings of the site boundaries are shown.
19) The location and exterior dimensions, measured from outside walls of the proposed buildings are shown on the drawing.
20) The proposed improvements and their relationship to existing contours and other topographic features are shown on the drawings.
21) There are no known easements impacting the proposed construction area of this property, other than as shown.
22) UTILITIES:
Prior to any excavation activity on this site, the contractor shall notify the utility protection service at 1-800-482-8998 and have all buried utilities located.
WATER:
The nearest water line is located along the North side of Race St. and the East side of Fair Park Blvd, based upon the records available through City Water and Light and field observation.
FIRE HYDRANTS:
There is an existing fire hydrant at the Northwest corner of Race St. & Fair Park Blvd.
SEWER:
The nearest gravity sewer line is located ona the North side of Race St.
NATURAL GAS:
No natural gas lines are shown on this plan.
ELECTRICAL LINES:
The location of existing electrical lines is based upon field location and the records available through City Water and Light.
STORM DRAINAGE:
This building site is to be drained by use of surface drainage as shown on Sheet 3.
DUMPSTER:
(type location of dumpster)
23) The drainage plan is indicated by the proposed contours, and proposed spot elevations for finished grades on Sheet 3. This set of plans (sheet 5) also includes soil and erosion control measures. It shall be the responsibility of the owner/developer to obtain the proper permits through ADEQ.

A) The soil and erosion control measures shown are the minimum requirements for the site.
B) The soil and erosion control measures shown shall be inspected at least weekly.
C) The soil and erosion control measures shall be inspected following each rainfall event to ensure they are in tact and functioning properly.
D) Additional soil and erosion control measures may be necessary as field, site, and weather conditions dictate.
E) The soil and erosion control facilities are to be installed prior to the commencement of construction, and are to be maintained for the duration of the construction period until the disturbed areas are stabilized.

24) PARKING:
The Site Development Plan addresses the parking for this site,
Parking Required:
Parking Provided: 32 spaces, including 2 spaces for persons with disabilities.
The dimensions of access drive are shown on Sheet 2.
Loading Area: No loading space will be necessary for this site.
All driveway areas for the site are proposed to be impervious surface, and are to have curb and gutter on the perimeter of the impervious areas.
25) Sign location and type:

26) Screening and Buffering: None shown except around dumpster pad.
27) Landscaping Plan: shown on sheets 6, 7, & 8.
28) There are no known restrictive covenants, grants of easements or other restrictions, other than as shown.
29) No additional common open space plan is proposed for this development.
30) Any exterior site lighting will be installed and directed in such a manner as to not impose on adjacent properties.
31) There are no observations of any historical structures on this site.
32) Greenspace calculations:
Total site: 56,620 sq. ft.
New building and parking: 31,763 sq. ft.
Greenspace: 24,857 sq. ft.
Developed site is ___% greenspace.

| Date | Scale | Job No. | Sheet No. |
|---|---|---|---|
| 2-24-2020 | N.T.S. | 119096 | 9 of 9 |

| Section | Township | Range | County |
|---|---|---|---|
| 28 | 14N | 04E | CRAIGHEAD |

Drawn By: RE Checked by: GH

ONLY COPIES WITH VIOLET COLORED SIGNATURE ARE ORIGINAL CIVILOGIC COPIES

© 2019, Civilogic

ENGINEERS PLANNERS SURVEYORS

Civilogic

203 Southwest Dr.–Jonesboro, AR–(870)932-7880–www.civilogic.net

| REVISIONS | | |
|---|---|---|
| DATE | REV. DESCRIPTION | ISSUED BY: |
| 00-00-00 | | |

STANDARD CONSTRUCTION DETAILS
& GENERAL NOTES
2631 RACE ST.
JONESBORO, ARKANSAS
FOR
FNBC COMMUNITY BANKERS

CERTIFICATE OF AUTHORIZATION
CIVILOGIC
No. 329
ARKANSAS–ENGINEER

STATE OF ARKANSAS
REGISTERED PROFESSIONAL ENGINEER
No. 7880
GEORGE M. HAMMAN

JOB NO.: 119096
SHEET NUMBER
9 of 9