DATE REVISED	DATE FILMED	DATE REVISED	DATE FILMED	FED.RD. DIST.NO.	STATE	FED. AID PROJ. NO.	SHEET NO.	TOTAL SHEETS
05-06-21				6	ARK.			
				JOB NO.		110800	2	70

(2) INDEX OF SHEETS AND STANDARD DRAWINGS

INDEX OF SHEETS

SHEET NO.	TITLE
1	TITLE SHEET
2	INDEX OF SHEETS AND STANDARD DRAWINGS
3	GOVERNING SPECIFICATIONS AND GENERAL NOTES
4 - 10B	SPECIAL DETAILS
11 - 13	TEMPORARY EROSION CONTROL DETAILS
14	MAINTENANCE OF TRAFFIC DETAILS
15 - 16	PERMANENT PAVEMENT MARKING PLAN
17 - 18	QUANTITIES
19	SUMMARY OF QUANTITIES AND REVISIONS
20 - 21	SURVEY CONTROL DETAILS
22	DEMOLITION PLAN
23 - 24	SITE PLAN
25 - 26	GRADING PLAN
27 - 29	UTILITY PLAN
30	SIGN PLACEMENT PLAN
31	A1.1 DOOR AND WINDOW SCHEDULES AND DETAILS
32	A1.2 FINISH SCHEDULE AND DETAILS
33	A1.3 DETAILS
34	A2.1 AHP SUBSTATION FLOOR AND DIMENSION PLANS
35	A2.2 RESTROOM BUILDING FLOOR DIMENSION PLANS
36	A3.1 EXTERIOR ELEVATIONS
37	A3.2 EXTERIOR ELEVATIONS
38	A4.1 WALL SECTIONS
39	A4.2 WALL SECTIONS
40	A5.1 AHP SUBSTATION REFLECTED CEILING AND ROOF PLANS AND DETAILS
41	A5.2 RESTROOM BUILDING REFLECTED CEILING AND ROOF PLANS AND DETAILS
42	S1.1 FOUNDATION PLANS AND DETAILS
43	S1.2 ROOF FRAMING PLANS AND DETAILS
44	S2.1 DETAILS
45	S2.2 DETAILS
46	M1.1 HVAC PLANS AND EQUIPMENT SCHEDULE
47	P1.1 AHP SUBSTATION SEWER PLAN
48	P1.2 RESTROOM BUILDING SEWER PLAN
49	P1.3 AHP SUBSTATION PIPING PLAN
50	P1.4 RESTROOM BUILDING PIPING PLAN
51	P2.1 DETAILS
52	P2.2 DETAILS
53	P3.1 FIXTURE SCHEDULE
54	P3.2 RISER DIAGRAMS
55	E1.1 AHP SUBSTATION POWER AND LIGHTING PLANS AND RISER DIAGRAM
56	E1.2 RESTROOM BUILDING POWER AND LIGHTING PLANS AND FIXTURE SCHEDULE
57	E2.1 PANEL SCHEDULES AND LEGEND
58	E2.2 EQUIPMENT RACK DETAIL
59	ILLUMINATION NOTES AND QUANTITIES
60	ILLUMINATION TABLES
61	ILLUMINATION LAYOUT - 100 SCALE
62 - 63	ILLUMINATION LAYOUT - 60 SCALE
64 - 70	ILLUMINATION DETAILS
	GRINDER PUMP STATION DRAWINGS

STATE OF ARKANSAS
REGISTERED PROFESSIONAL ENGINEER
No. 10479
BRENT L. MASSEY

5/7/2021

ROADWAY STANDARD DRAWINGS

DRWG.NO.	TITLE	DATE
CDP-1	CONCRETE DITCH PAVING	12-08-16
CG-1	CURBING DETAILS	11-29-07
DR-1	DETAILS OF DRIVEWAYS & ISLANDS	11-07-19
FES-1	FLARED END SECTION	10-18-96
FES-2	FLARED END SECTION	10-18-96
FPC-9S	DETAILS OF DROP INLET & JUNCTION BOX (TYPE ST)	07-26-12
PCC-1	CONCRETE PIPE CULVERT FILL HEIGHTS & BEDDING	02-27-14
PM-1	PAVEMENT MARKING DETAILS	02-27-20
SD-11	STEEL POLE WITH MAST ARM	11-16-17
SHS-1	STANDARD HIGHWAY SIGNS AND SUPPORTS ASSEMBLIES	09-12-13
SHS-3	DETAIL OF BREAKAWAY SIGN SUPPORTS FOR GUIDE SIGNS	09-12-13
SHS-5	DETAILS OF GUIDE SIGN PANELS	09-12-13
SHS-6	MOUNTING DETAILS FOR DEMOUNTABLE LEGEND ON GUIDE SIGNS	09-12-13
SHS-7	DETAIL OF OMNI-DIRECTIONAL BREAKAWAY SIGN SUPPORTS	09-12-13
TC-1	STANDARD TRAFFIC CONTROLS FOR HIGHWAY CONSTRUCTION	11-07-19
TC-2	STANDARD TRAFFIC CONTROLS FOR HIGHWAY CONSTRUCTION	11-07-19
TC-3	STANDARD TRAFFIC CONTROLS FOR HIGHWAY CONSTRUCTION	02-27-20
TEC-1	TEMPORARY EROSION CONTROL DEVICES	11-16-17
TEC-2	TEMPORARY EROSION CONTROL DEVICES	06-02-94
TEC-3	TEMPORARY EROSION CONTROL DEVICES	11-03-94
WR-2	WHEELCHAIR RAMPS ALTERATIONS ONLY	10-09-03

5/6/2021

31944 - CS.dgn

INDEX OF SHEETS AND STANDARD DRAWINGS

DATE REVISED	DATE FILMED	DATE REVISED	DATE FILMED	FED.RD. DIST.NO.	STATE	FED. AID PROJ. NO.	SHEET NO.	TOTAL SHEETS
04-26-21				6	ARK.			
05-06-21				JOB NO.		110800	3	70

(2) GOVERNING SPECIFICATIONS AND GENERAL NOTES

STATE OF ARKANSAS
REGISTERED PROFESSIONAL ENGINEER
No. 10479
BRENT L. MASSEY

5/7/2021

GOVERNING SPECIFICATIONS

ARKANSAS STATE HIGHWAY COMMISSION STANDARD SPECIFICATIONS FOR HIGHWAY CONSTRUCTION, EDITION OF 2014, AND THE FOLLOWING SPECIAL PROVISIONS AND SUPPLEMENTAL SPECIFICATIONS:

NUMBER	TITLE
ERRATA_____	ERRATA FOR THE BOOK OF STANDARD SPECIFICATIONS
100-3_____	CONTRACTOR'S LICENSE
100-4_____	DEPARTMENT NAME CHANGE
102-2_____	ISSUANCE OF PROPOSALS
108-1_____	LIQUIDATED DAMAGES
108-2_____	WORK ALLOWED PRIOR TO ISSUANCE OF WORK ORDER
110-1_____	PROTECTION OF WATER QUALITY AND WETLANDS
210-1_____	UNCLASSIFIED EXCAVATION
306-1_____	QUALITY CONTROL AND ACCEPTANCE
600-2_____	INCIDENTAL CONSTRUCTION
603-1_____	LANE CLOSURE NOTIFICATION
604-1_____	RETROREFLECTIVE SHEETING FOR TRAFFIC CONTROL DEVICES IN CONSTRUCTION ZONES
604-3_____	TRAFFIC CONTROL DEVICES IN CONSTRUCTION ZONES (MASH)
605-1_____	CONCRETE DITCH PAVING
620-1_____	MULCH COVER
621-1_____	FILTER SOCKS
632-1_____	CONCRETE ISLAND
633-1_____	CONCRETE WALKS, CONCRETE STEPS, AND HAND RAILING
634-1_____	CURBING
700-2_____	TRAFFIC CONTROL FACILITIES
723-1_____	GENERAL REQUIREMENTS FOR SIGNS
730-1_____	BREAKAWAY SIGN SUPPORT
JOB 110800__	BIDDING REQUIREMENTS AND CONDITIONS
JOB 110800__	BROADBAND INTERNET SERVICE FOR FIELD OFFICE
JOB 110800__	CONCRETE DITCH PAVING (TYPE FLUME)
JOB 110800__	DYNAMIC MESSAGING SYSTEM
JOB 110800__	ELECTRICAL CONDUCTORS FOR LUMINAIRES
JOB 110800__	ELECTRICAL CONDUCTORS-IN-CONDUIT
JOB 110800__	ELECTRICAL METERING
JOB 110800__	ESTABLISHING CONTRACT TIME - WORKING DAY CONTRACT
JOB 110800__	FIBER OPTIC FACILITIES
JOB 110800__	HIGH MAST ILLUMINATION ASSEMBLY
JOB 110800__	LED ROADWAY ILLUMINATION POLE
JOB 110800__	MAINTENANCE OF TRAFFIC
JOB 110800__	MANDATORY ELECTRONIC CONTRACT
JOB 110800__	MANDATORY ELECTRONIC DOCUMENT SUBMITTAL
JOB 110800__	NATURAL GAS DISTRIBUTION
JOB 110800__	PARTNERING REQUIREMENTS
JOB 110800__	PTZ CAMERAS
JOB 110800__	PEDESTAL TYPE SERVICE POINT ASSEMBLY
JOB 110800__	PROJECT MANUAL
JOB 110800__	RADAR DETECTION SYSTEM
JOB 110800__	ROLLER COMPACTED CONCRETE PAVEMENT
JOB 110800__	SANITARY SEWER FACILITIES
JOB 110800__	SANITARY SEWER GRINDER
JOB 110800__	SANITARY SEWER GRINDER PUMP STATION
JOB 110800__	SAWCUT EXISTING CONCRETE PAVING
JOB 110800__	SHORING FOR CULVERTS
JOB 110800__	SOIL STABILIZATION
JOB 110800__	STEEL PIPE BOLLARDS
JOB 110800__	STORM WATER POLLUTION PREVENTION PLAN
JOB 110800__	THERMOPLASTIC PAVEMENT MARKING SYMBOL (WHEELCHAIR)
JOB 110800__	TRASH RECEPTACLES
JOB 110800__	UNDERCUT BACKFILL
JOB 110800__	UTILITY ADJUSTMENTS
JOB 110800__	VALUE ENGINEERING
JOB 110800__	WATER DISTRIBUTION FACILITIES

GENERAL NOTES

1. ALL PIPE LINES, POWER, TELEPHONE, AND TELEGRAPH LINES TO BE MOVED OR LOWERED BY THE RESPECTIVE OWNERS AS PER AGREEMENT WITH SUCH OWNERS.

2. ANY EQUIPMENT OR APPURTENANCE THAT INTERFERES WITH THE PROPOSED CONSTRUCTION AND WHICH MAY BE THE PROPERTY OF UTILITY SERVICE ORGANIZATIONS SHALL BE MOVED BY THE OWNERS UNLESS OTHERWISE PROVIDED.

3. ALL LAND MONUMENTS LOCATED WITHIN THE CONSTRUCTION AREA SHALL BE PROTECTED IN ACCORDANCE WITH SECTION 107.12 OF THE STANDARD SPECIFICATIONS.

4. ALL TREES THAT DO NOT DIRECTLY INTERFERE WITH THE PROPOSED CONSTRUCTION SHALL BE SPARED AS DIRECTED BY THE ENGINEER. CARE AND DISCRETION SHALL BE USED TO INSURE THAT ALL TREES NOT TO BE REMOVED SHALL BE HARMED AS LITTLE AS POSSIBLE DURING THE CONSTRUCTION OPERATIONS.

5. THE SEQUENCE AS SHOWN ON THE MAINTENANCE OF TRAFFIC PLANS IS A GENERAL OUTLINE FOR THE CONSTRUCTION OF THIS PROJECT, AND IN NO WAY IS IT INTENDED TO COVER EVERY ITEM IN THE PROJECT. ITEMS NOT CRITICAL TO THE CONSTRUCTION SEQUENCE MAY BE CONSTRUCTED IN ANY STAGE AS APPROVED BY THE RESIDENT ENGINEER.

6. ALL FLEXIBLE BASE AND ASPHALTIC PAVEMENTS REMOVED SHALL BE PAID FOR UNDER THE ITEM NO. 210 - UNCLASSIFIED EXCAVATION.

7. THE EXISTING ASPHALT PAVEMENT TO BE REMOVED FROM THE REMAINING PAVEMENT SHALL BE SEPARATED BY SAWING ALONG A NEAT LINE. AFTER SAWING, THE PAVEMENT TO BE REMOVED SHALL BE CAREFULLY REMOVED IN A MANNER THAT WILL NOT DAMAGE THE PAVEMENT THAT IS TO REMAIN. ANY DAMAGE OF THE ASPHALT PAVEMENT THAT IS TO REMAIN IN PLACE SHALL BE REPAIRED AT THE CONTRACTOR'S EXPENSE.

8. WHEN COLD MILLING IS INCLUDED IN THE CONTRACT, THE CONTRACTOR SHALL PROVIDE A TEMPORARY TRANSITION IN AREAS OF PAVEMENT DIFFERENTIAL RESULTING FROM THE COLD MILLING. MEASUREMENT FOR THE MATERIAL USED WILL BE BASED ON THE ACCEPTED MIX DESIGN FOR THE TYPE OF ASPHALT HOT MIX SPECIFIED IN THE PLANS FOR THE MAT TO BE PLACED AFTER COLD MILLING, AND PAYMENT WILL BE AT THE CONTRACT UNIT PRICES BID FOR THE VARIOUS COMPONENTS OF THE MIX.

9. MATERIAL GENERATED FROM COLD MILLING OPERATIONS SHALL REMAIN THE PROPERTY OF THE CONTRACTOR.

10. THE COLD MILLED SURFACE SHALL BE OVERLAID WITHIN 10 WORKING DAYS AFTER THE MILLING IS COMPLETED.

11. ASPHALT DEBRIS RESULTING FROM THE PREPARATORY WORK SHALL BE REMOVED FROM THE PROJECT. THIS MATERIAL SHALL NOT BE BURIED WITHIN THE RIGHT OF WAY.

DATE REVISED	DATE FILMED	DATE REVISED	DATE FILMED	FED.RD. DIST.NO.	STATE	FED. AID PROJ. NO.	SHEET NO.	TOTAL SHEETS
05-06-21				6	ARK.			
				JOB NO.		110800	7	70
				(2) SPECIAL DETAILS				

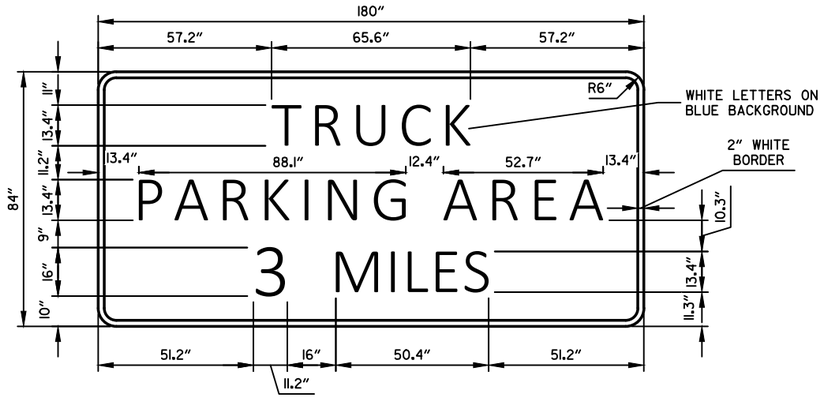

ML55-TP275-3SB

N.T.S.

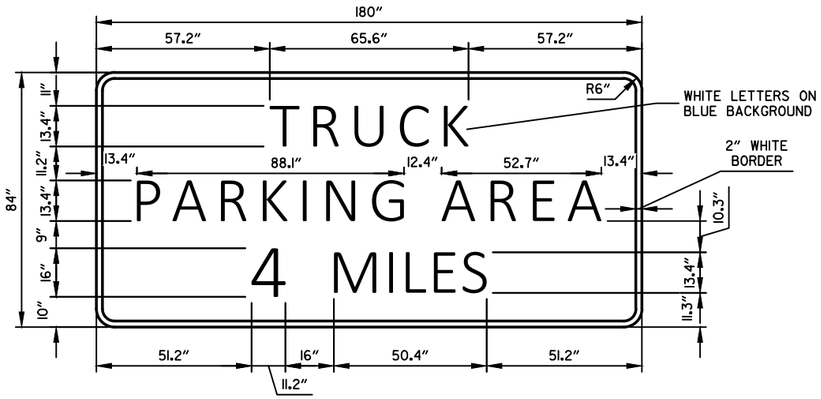

ML40-TP275-4WB

N.T.S.

STATE OF ARKANSAS
REGISTERED PROFESSIONAL ENGINEER
No. 10479
BRENT L. MASSEY

5/7/2021

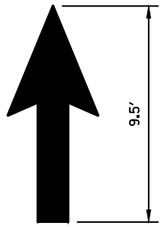

THROUGH LANE-USE ARROW

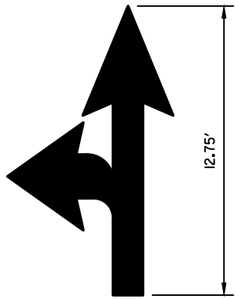

LEFT TURN AND THROUGH LANE-USE ARROW

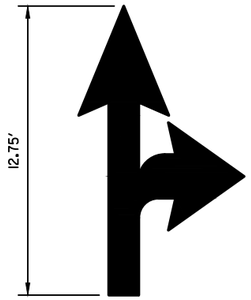

RIGHT TURN AND THROUGH LANE-USE ARROW

NOTES:
1. ARROWS FOR ROADS AND DRIVEWAYS SHALL BE APPLIED ACCORDING TO REQUIREMENTS AS OUTLINED IN SECTION 3B-20 OF THE MANUAL ON UNIFORM TRAFFIC CONTROL DEVICES FOR STREETS AND HIGHWAYS
2. THE ARROWS ARE TO BE PAINTED THERMOPLASTIC WHITE.

THROUGH LANE USE ARROW PAVEMENT MARKING

N.T.S.

NOTES:
1. ARROWS FOR ROADS AND DRIVEWAYS SHALL BE APPLIED ACCORDING TO REQUIREMENTS AS OUTLINED IN SECTION 3B-20 OF THE MANUAL ON UNIFORM TRAFFIC CONTROL DEVICES FOR STREETS AND HIGHWAYS
2. THE ARROWS ARE TO BE PAINTED THERMOPLASTIC WHITE.

TURN AND THROUGH LANE USE ARROW PAVEMENT MARKING

N.T.S.

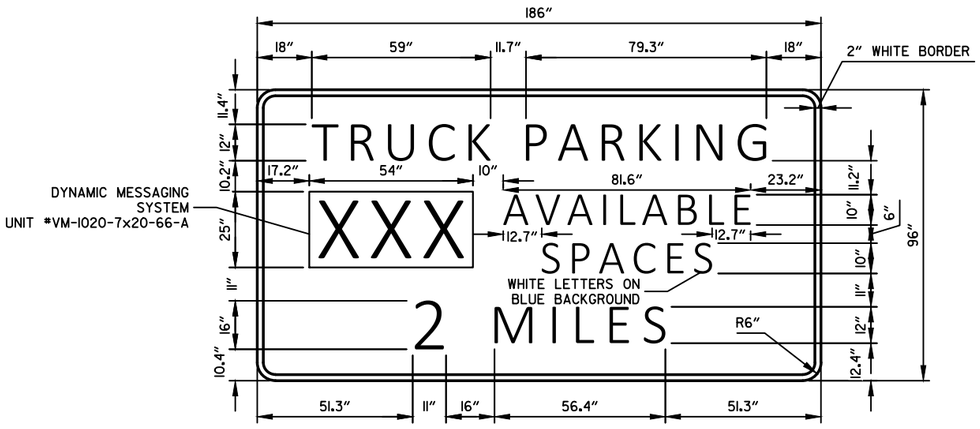

ML40-TP275-2WB

N.T.S.

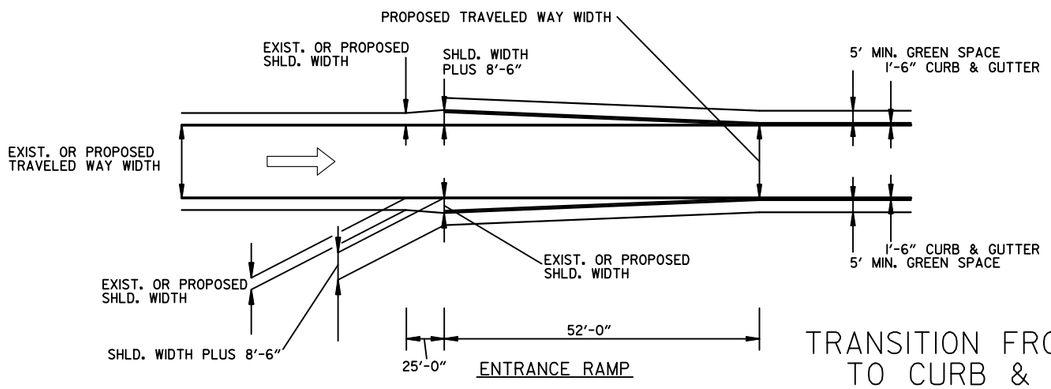

ENTRANCE RAMP

TRANSITION FROM OPEN SHOULDER TO CURB & GUTTER SECTION

N.T.S.

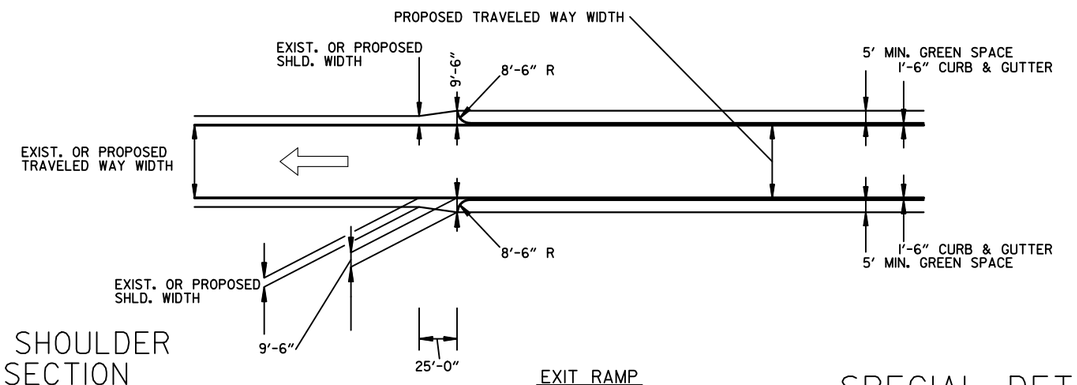

EXIT RAMP

SPECIAL DETAILS

5/6/2021

31944 - DET.dgn

DATE REVISED	DATE FILMED	DATE REVISED	DATE FILMED	FED.RD. DIST.NO.	STATE	FED. AID PROJ. NO.	SHEET NO.	TOTAL SHEETS
05-06-21				6	ARK.			
				JOB NO.		110800	10A	70

(2) SPECIAL DETAILS

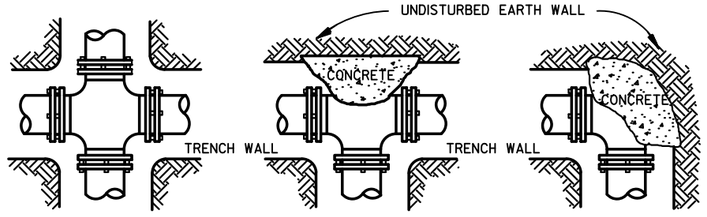

CROSS TEE 90° BEND
(ALL BENDS SIMILAR)

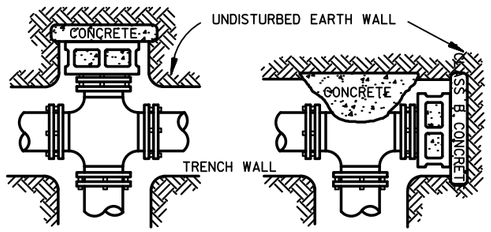

CROSS WITH PLUG TEE WITH PLUG

HORIZONTAL FITTINGS

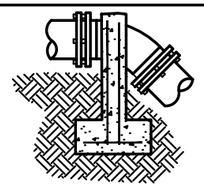

UPWARD THRUST BLOCKING

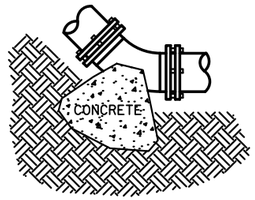

DOWNWARD THRUST BLOCKING
(SEE HORIZONTAL TABLE)

45° BENDS
(ALL BENDS SIMILAR)

VERTICAL FITTINGS

HORIZONTAL THRUST BLOCKING TABLE

SIZE	REQUIRED SQ. FT. OF UNDISTURBED EARTHWALL FOR REACTION BACKING — TYPE OF FITTINGS				
	TEE	90°	45°	22 1/2°	11 1/4°
2"	1	1	1	1	1
3"	1	1	1	1	1
4"	1	1	1	1	1
6"	1.5	2	1	1	1
8"	2.5	3.5	1.8	1	1
10"	4	5.5	2.8	1.5	1
12"	6	8	4	2	1.5
14"	8	11	5.5	3	2
16"	10	14.2	7	4	3
18"	21	21	12	6	4
20"	26	26	14	7	5
24"	38	38	20	10	7
30"	59	59	32	16	9
36"	85	85	46	23	12

MINIMUM CONCRETE VOLUMES FOR UPWARD THRUST BLOCKING

PIPE SIZE Inches	11.25 DEGREE BEND ANCHOR STRAPS NO.	SIZE	Concrete VOLUME cu.yd.	22.5 DEGREE BEND ANCHOR STRAPS NO.	SIZE	Concrete VOLUME cu.yd.	45 DEGREE BEND ANCHOR STRAPS NO.	SIZE	Concrete VOLUME cu.yd.	90 DEGREE BEND ANCHOR STRAPS NO.	SIZE	Concrete VOLUME cu.yd.
2.0	1	#4 DIAM.	0.04	1	#4 DIAM.	0.08	1	#4 DIAM.	0.16	1	#4 DIAM.	0.30
3.0	1	#4 DIAM.	0.09	1	#4 DIAM.	0.18	1	#4 DIAM.	0.36	1	#4 DIAM.	0.67
4.0	1	#4 DIAM.	0.16	1	#4 DIAM.	0.33	1	#4 DIAM.	0.64	1	#4 DIAM.	1.19
6.0	1	#4 DIAM.	0.37	1	#4 DIAM.	0.74	1	#4 DIAM.	1.44	1	#4 DIAM.	2.67
8.0	1	#4 DIAM.	0.66	1	#4 DIAM.	1.31	1	#4 DIAM.	2.57	2	#4 DIAM.	4.74
10.0	1	#4 DIAM.	1.03	1	#4 DIAM.	2.04	2	#4 DIAM.	4.01	2	#4 DIAM.	7.40
12.0	1	#4 DIAM.	1.48	1	#4 DIAM.	2.94	2	#4 DIAM.	5.77	2	#5 DIAM.	10.65
14.0	1	#4 DIAM.	2.01	2	#4 DIAM.	4.01	2	#4 DIAM.	7.86	2	#6 DIAM.	14.52
16.0	1	#4 DIAM.	2.63	2	#4 DIAM.	5.23	2	#5 DIAM.	10.26	3	#5 DIAM.	18.95

NOTE: 18" AND LARGER REQUIRES SPECIFIC DESIGN

NOTES:
1. DO NOT COVER BELLS OR FLANGES WITH CONCRETE
2. WRAP ALL FITTINGS WITH VISQUEEN.
3. BACK ALL TEES ACCORDING TO SIZE OF BRANCH.
4. BACKING FUTURE LINE EXTENSIONS SHALL BE SUCH THAT LATER REMOVAL IS POSSIBLE.
5. ALL BENDS WHERE FITTINGS ARE USED, BOTH HORIZONTAL OR VERTICAL SHALL BE BACKED.
6. REACTION BACKING TABLE IS BASED ON 100 P.S.I. AND SOIL BEARING PRESSURE OF 2,500 lb./sq.ft. ADDITIONAL BACKING MAY BE REQUIRED IN SOME AREAS AS DIRECTED BY ENGINEERS.
7. ALL CONCRETE SHALL BE 2500 P.S.I.

THRUST BLOCKING

N.T.S.

STATE OF ARKANSAS
REGISTERED PROFESSIONAL ENGINEER
No. 10479
BRENT L. MASSEY

5/7/2021

NOTE:
1. ALL HYDRANTS TO BE SET PLUMB W/ NOZZLE FACING STREET UNLESS OTHERWISE SPECIFIED BY FIRE DEPARTMENT
2. ALL CONCRETE TO BE 2500 PSI P.C. CONCRETE
3. FIRE HYDRANT ASSEMBLY INCLUDES GATE VALVE AND APPURTENANCES

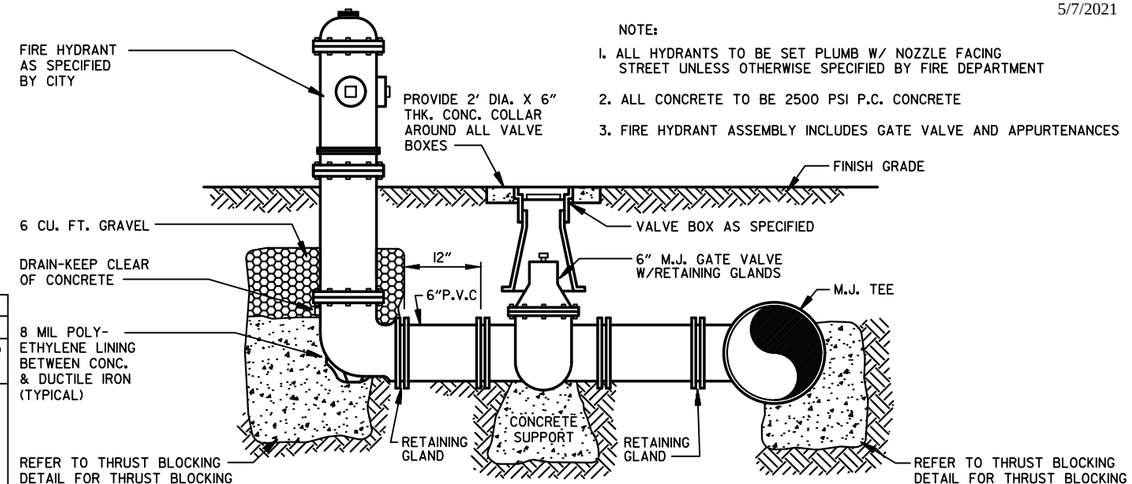

FIRE HYDRANT ASSEMBLY

N.T.S.

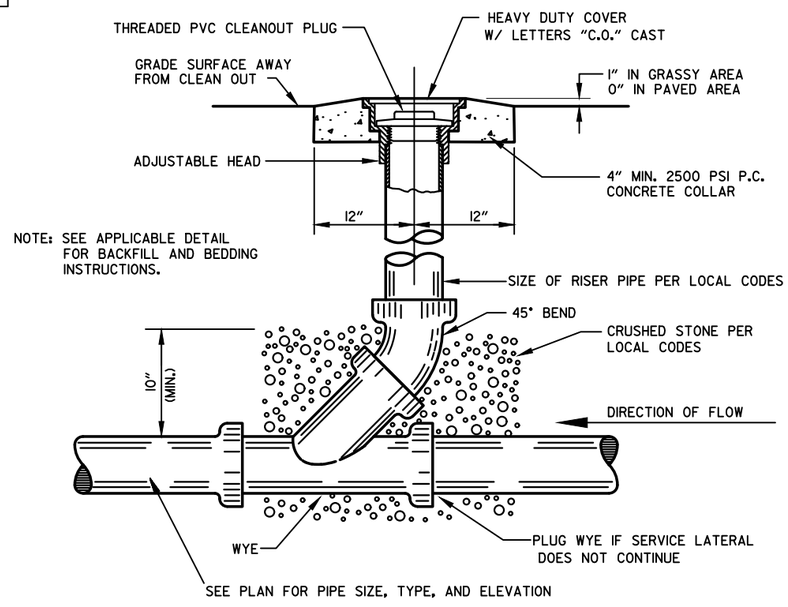

SANITARY SEWER CLEAN-OUT

N.T.S.

5/6/2021

31944 - DET.dgn

SPECIAL DETAILS

DATE REVISED	DATE FILMED	DATE REVISED	DATE FILMED	FED.RD. DIST.NO.	STATE	FED. AID PROJ. NO.	SHEET NO.	TOTAL SHEETS
05-06-21				6	ARK.			
				JOB NO.		110800	10B	70

(2) SPECIAL DETAILS

STATE OF ARKANSAS
REGISTERED PROFESSIONAL ENGINEER
No. 10479
BRENT L. MASSEY

5/7/2021

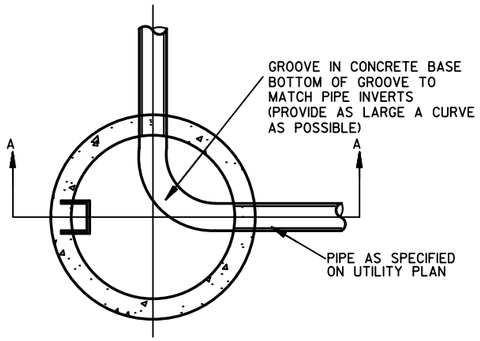

SEC. B-B

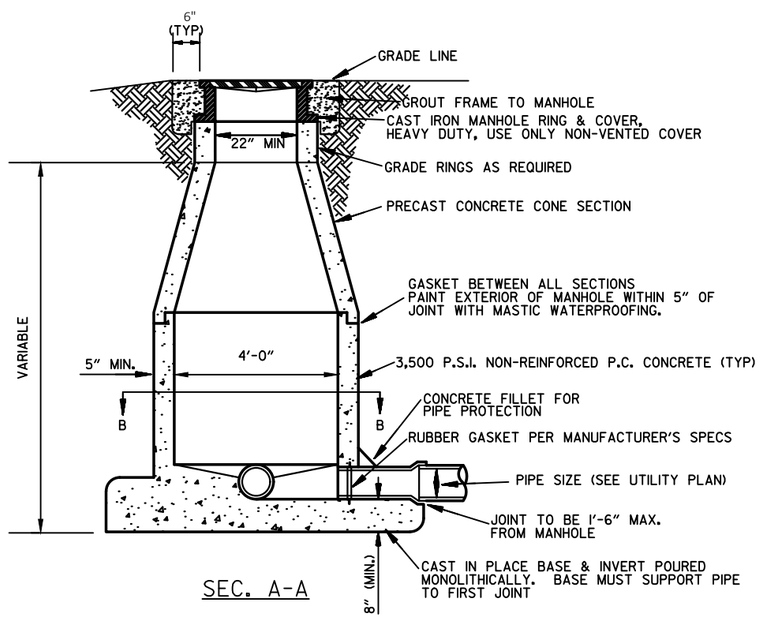

SEC. A-A

SANITARY SEWER MANHOLE (CAST IN PLACE)

N.T.S.

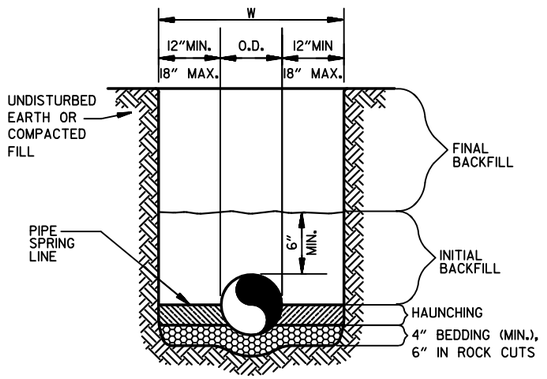

WATER LINE & FORCE MAIN

N.T.S.

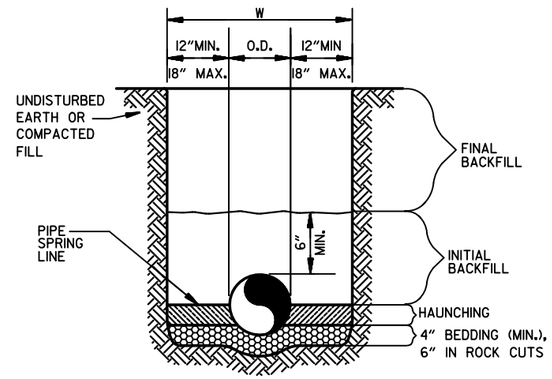

SANITARY SEWER

N.T.S.

GENERAL NOTES

1. BEDDING SHALL BE CLASS I-A WORKED BY HAND. IF GROUNDWATER IS ANTICIPATED, THEN BEDDING SHALL BE CLASS I-B COMPACTED TO 85% STANDARD PROCTOR. (SEE SPECIFICATIONS FOR GRADATION)
2. HAUNCHING SHALL BE WORKED AROUND THE PIPE BY HAND TO ELIMINATE VOIDS AND SHALL BE CLASS I-A OR CLASS I-B OR CLASS II COMPACTED TO 85% PROCTOR.
3. INITIAL BACKFILL SHALL BE CLASS I-A WORKED BY HAND, OR CLASS I-B OR CLASS II COMPACTED TO 85% STANDARD PROCTOR.
4. INITIAL BACKFILL NOT UNDER PAVED AREAS CAN BE CLASS III COMPACTED TO 90% STANDARD PROCTOR.
5. FINAL BACKFILL SHALL BE CLASS I, II, OR III COMPACTED AS NOTED IN NOTES 3. AND 4
6. FINAL BACKFILL NOT UNDER PAVED AREAS CAN BE CLASS IV-A COMPACTED TO 95% STANDARD PROCTOR.
7. ALL MATERIALS ARE CLASSIFIED IN ACCORDANCE WITH ASTM D 2321, LATEST EDITION.
8. ALL MATERIALS SHALL BE INSTALLED IN MAXIMUM 8" LOOSE LIFTS IN ACCORDANCE WITH ASTM D 698. CLASS III AND IV-A MATERIALS SHALL BE COMPACTED NEAR OPTIMUM MOISTURE CONTENT.
9. FILL SALVAGED FROM EXCAVATION SHALL BE FREE OF DEBRIS, ORGANICS AND ROCKS LARGER THAN 3".
10. ALL TRENCH EXCAVATIONS SHALL BE SLOPED, SHORED, SHEETED, BRACED, OR OTHERWISE SUPPORTED IN COMPLIANCE WITH OSHA REGULATIONS AND LOCAL ORDINANCES. (SEE SPECIFICATIONS)

SANITARY SEWER AND WATER LINE TRENCHING AND BEDDING

N.T.S.

5/6/2021

31944 - DET.dgn

DATE REVISED	DATE FILMED	DATE REVISED	DATE FILMED	FED.RD. DIST.NO.	STATE	FED. AID PROJ. NO.	SHEET NO.	TOTAL SHEETS
05-06-21				6	ARK.			
				JOB NO.	110800		18	70

(2) QUANTITIES

PIPE BOLLARDS

LOCATION	PIPE BOLLARD
	EACH
ENTIRE PROJECT	32
TOTAL:	**32**

GAS

LOCATION	GAS SERVICE	GAS LINE
	EACH	LIN. FT.
ENTIRE PROJECT	1	452
TOTALS:	**1**	**452**

NOTE: GAS METER SHALL BE INCLUDED IN THE GAS SERVICE QUANTITY AND PLACED AT THE DISCRETION OF THE UTILITY PROVIDER.

STANDARD SIGNS - SHEET ALUMINIUM 0.100" THICKNESS (5 SQ. FT. OR LESS)

SIGN NUMBER	DESCRIPTION	SIGN SIZE	TOTAL SIGNS REQUIRED		OMNI-DIRECTIONAL BREAKAWAY SIGN SUPPORTS (TYPE G-1)
			NO.	SQ. FT.	EACH
D9-6	ACCESSIBLE PARKING	24"x24"	1	4.0	1
R3-1	NO RIGHT TURN	24"x24"	4	16.0	
R5-1	DO NOT ENTER	24"x24"	5	20.0	5
R6-2	ONE WAY (ARROW LEFT)	12"x18"	4	6.0	4
TOTALS:				**42.0**	**10**

NOTE: THIS IS A HIGH TRAFFIC VOLUME ROAD AS DEFINED IN SECTION 604.03, STANDARD SPECIFICATIONS FOR HIGHWAY CONSTRUCTION.

FIBER OPTIC

LOCATION	NON-METALLIC CONDUIT (1")	CONCRETE PULL BOX (TYPE 3 HD)	FIBER OPTIC CABLE	FIBER OPTIC SERVICE
	LIN. FT.	LIN. FT.	LIN. FT.	EACH
ENTIRE PROJECT	3498	6	5550	1
TOTALS:	**3498**	**6**	**5550**	**1**

EARTHWORK

LOCATION	UNCLASSIFIED EXCAVATION	COMPACTED EMBANKMENT	UNDERCUT BACKFILL	* SOIL STABILIZATION
	CU. YD.			TON
ENTIRE PROJECT	2988	6095	5334	
ENTIRE PROJECT TO BE USED IF AND WHEN DIRECTED BY THE ENGINEER	100	150	150	40
TOTALS:	**3088**	**6245**	**5484**	**40**

QUANTITY ESTIMATED.
* SEE SECTION 104.03 OF THE STD. SPECS.

NOTE: EARTHWORK QUANTITIES SHOWN ABOVE SHALL BE PAID AS PLAN QUANTITY.

STATE OF ARKANSAS
REGISTERED PROFESSIONAL ENGINEER
No. 10479
BRENT L. MASSEY
5/13/2021

SELECTED PIPE BEDDING

LOCATION	SELECTED PIPE BEDDING
	CU.YD.
ENTIRE PROJECT TO BE USED IF	
AND WHERE DIRECTED BY THE	25
ENGINEER	
TOTAL:	**25**

NOTE: QUANTITY ESTIMATED.
SEE SECTION 104.03 OF THE STD. SPECS.

STRUCTURES

NORTHING	EASTING	REINFORCED CONCRETE PIPE (CLASS III)			FLARED END SECTIONS FOR R.C. PIPE CULVERTS		DROP INLETS TYPE	STD. DWG. NOS.
		24"	30"	36"	30"	36"	ST	
		LIN. FT.			EACH			
304395.97	1838160.83	318					1	FPC-9S, PCC-1
304279.35	1837864.77		349		1		1	FES-1, FES-2, FPC-9S, PCC-1
303885.03	187669.47			103		2		FES-1, FES-2, FPC-9S, PCC-1
TOTALS:		**318**	**349**	**103**	**1**	**2**	**2**	

BASIS OF ESTIMATE:
NOTE: FOR R.C. PIPE CULVERT INSTALLATIONS USE TYPE 3 BEDDING UNLESS OTHERWISE SPECIFIED.

ELECTRICAL

LOCATION	ELECTRIC METER	NON-METALLIC CONDUIT (2")	ELECTRICAL CONDUCTORS-IN-CONDUIT (2C/10)	ELECTRICAL CONDUCTORS-IN-CONDUIT (2C/8)	ELECTRICAL CONDUCTORS-IN-CONDUIT (2C/3)	CONCRETE PULL BOX (TYPE 2 HD)	TRAFFIC SIGNAL PEDESTAL POLE WITH FOUNDATION (30')	TRAFFIC SIGNAL PEDESTAL POLE WITH FOUNDATION (50')	PTZ CAMERAS	RADAR DETECTION SYSTEM
	EACH	LIN. FT.	LIN. FT.	LIN. FT.	LIN. FT.	EACH	EACH	EACH	EACH	EACH
ENTIRE PROJECT	1	2599	1029	1673	1351	4	2	2	4	2
TOTALS:	**1**	**2599**	**1029**	**1673**	**1351**	**4**	**2**	**2**	**4**	**2**

SANITARY SEWER

LOCATION	SANITARY SEWER FORCE MAIN (2 1/2")	SANITARY SEWER PIPE (PVC SDR-26) (4")	SANITARY SEWER PIPE (PVC SDR-26) (6")	SANITARY SEWER CLEANOUT (4")	SANITARY SEWER MANHOLES (4' DIA.)	SANITARY SEWER GRINDER PUMP STATION	SANITARY SEWER GRINDER	TAPPING SADDLE (2.5")	GATE VALVE (2.5")
	LIN. FT.	LIN. FT.	LIN. FT.	EACH	EACH	EACH	EACH	EACH	EACH
ENTIRE PROJECT	2968	50	15	5	1	1	1	1	1
TOTALS:	**2968**	**50**	**15**	**5**	**1**	**1**	**1**	**1**	**1**

MAIN LANES ROADSIDE MOUNTED SIGNING QUANTITIES

SIGN NO. / LOCATION	I-BEAM STRUCTURE TYPE			GUIDE SIGN DEMOUNTABLE LEGEND			I-BEAM BREAKAWAY SIGN SUPPORT												SIGN POST AND STUB	DYNAMIC MESSAGING SYSTEM
							STEEL SECT.		SIGN POST LENGTH			STUB POST			FOOTINGS					
	G1	G2	G3	LENGTH	HEIGHT		A-572		H - 1	H - 2	H - 3	H - 1	H - 2	H - 3	DIA.	DEPTH	EMBED.			
				LIN. FT.		SQ. FT.	BEAM	LBS	LIN FT			LIN FT			LIN FT				POUND	EACH
ML55-TP275-3SB		1		15.00	7.00	105.00	W8	18.00	14.00	15.00		3.99	3.99		2.50	5.50	3.66		665.64	
ML40-TP275-4WB		1		15.00	7.00	105.00	W8	18.00	14.00	15.00		3.99	3.99		2.50	5.50	3.66		665.64	
ML40-TP275-2WB		1		15.50	8.00	124.00	W8	21.00	15.00	16.00		4.99	4.99		2.50	7.00	4.66		860.58	1.00
TOTALS :		**3**				**334.00**													**2191.86**	**1.00**

CONCRETE BASE

LOCATION	LENGTH	CEMENT STABILIZED CRUSHED STONE BASE COURSE (6" COMP'D. DEPTH)				TYPE 8 GEOTEXTILE FABRIC		ROLLER-COMPACTED CONCRETE PAVEMENT	
		AVG. WID.	PROCESSING	CEMENT	AGGREGATE	AVG. WID.	SQ. YD.	AVG. WID.	8"
	FEET	FEET	SQ. YD.	TON	TON	FEET		FEET	SQ. YD.
ENTIRE PROJECT - OVERLAY OF EXISTING PAVEMENT	VAR.					VAR.	8525.31	VAR.	8525.31
ENTIRE PROJECT - FULL-DEPTH NEW PAVEMENT	VAR.	VAR.	21694.71	379.39	7231.57	VAR.	21694.71	VAR.	21694.71
TOTALS:			**21694.71**	**379.39**	**7231.57**		**30220.02**		**30220.02**

BASIS OF ESTIMATE:
CEMENT STABILIZED CRUSHED STONE BASE COURSE = 94.0% AGGR. 6.0% CEMENT

WATER

LOCATION	PVC AWWA C900 CLASS 160 (1")	PVC AWWA C900 CLASS 160 (3")	PVC AWWA C900 CLASS 150 (6")	GATE VALVE (6")	FIRE HYDRANT ASSEMBLY	MJ TEE (3" X 3")	MJ TEE (6" X 6")	DUTILE IRON FITTINGS
	LIN. FT.	LIN. FT.	LIN. FT.	EACH	EACH	EACH	EACH	LBS.
ENTIRE PROJECT	55	99	310	1	1	1	1	160
TOTALS:	**55**	**99**	**310**	**1**	**1**	**1**	**1**	**160**

DATE REVISED	DATE FILMED	DATE REVISED	DATE FILMED	FED.RD. DIST.NO.	STATE	FED. AID PROJ. NO.	SHEET NO.	TOTAL SHEETS
04-26-21				6	ARK.			
05-06-21				JOB NO.	110800		19	70

(2) SUMMARY OF QUANTITIES AND REVISIONS

SUMMARY OF QUANTITIES (BOX 1 OF 2)

ITEM NUMBER	ITEM	QUANTITY	UNIT
201	CLEARING	10	ACRE
201	GRUBBING	10	ACRE
202	REMOVAL AND DISPOSAL OF CURB AND GUTTER	2803	LIN. FT.
202	REMOVAL AND DISPOSAL OF UNDERGROUND ELECTRICAL LINE	506	LIN. FT.
202	REMOVAL AND DISPOSAL OF CONCRETE PAVEMENT	1247	SQ. YD.
202	REMOVAL AND DISPOSAL OF WALKS	646	SQ. YD.
202	REMOVAL AND DISPOSAL OF PIPE CULVERTS	5	EACH
202	REMOVAL AND DISPOSAL OF POLE AND FOUNDATION	5	EACH
202	REMOVAL AND DISPOSAL OF ELECTRICAL TRANSFORMER	1	EACH
SS & 210	UNCLASSIFIED EXCAVATION	3088	CU. YD.
210	COMPACTED EMBANKMENT	6245	CU. YD.
SP & 210	UNDERCUT BACKFILL	5484	CU. YD.
SP & 210	SOIL STABILIZATION	40	TON
308	AGGREGATE IN CEMENT STABILIZED CRUSHED STONE BASE COURSE	7232	TON
308	CEMENT IN CEMENT STABILIZED CRUSHED STONE BASE COURSE	379	TON
308	PROCESSING CEMENT STABILIZED CRUSHED STONE BASE COURSE	21695	SQ. YD.
SP	ROLLER COMPACTED CONCRETE PAVEMENT (8")	30220	SQ. YD.
601	MOBILIZATION	1.00	LUMP SUM
SP & 602	FURNISHING FIELD OFFICE	1	EACH
SP, SS, & 603	MAINTENANCE OF TRAFFIC	1.00	LUMP SUM
SS & 604	SIGNS	48	SQ. FT.
SS & 604	BARRICADES	32	LIN. FT.
SP, SS, & 605	CONCRETE DITCH PAVING (TYPE FLUME)	220	SQ. YD.
606	24" REINFORCED CONCRETE PIPE CULVERTS (CLASS III)	318	LIN. FT.
606	30" REINFORCED CONCRETE PIPE CULVERTS (CLASS III)	349	LIN. FT.
606	36" REINFORCED CONCRETE PIPE CULVERTS (CLASS III)	103	LIN. FT.
606	30" FLARED END SECTIONS FOR REINFORCED CONCRETE PIPE CULVERTS	1	EACH
606	36" FLARED END SECTIONS FOR REINFORCED CONCRETE PIPE CULVERTS	2	EACH
606	SELECTED PIPE BEDDING	25	CU. YD.
SS & 609	DROP INLETS (TYPE ST)	2	EACH
620	LIME	5	TON
620	SEEDING	2.65	ACRE
SS & 620	MULCH COVER	5.30	ACRE
620	WATER	326.7	M. GAL.
621	TEMPORARY SEEDING	2.65	ACRE
621	SILT FENCE	100	LIN. FT.
621	SAND BAG DITCH CHECKS	748	BAG
621	SEDIMENT BASIN	12	CU. YD.
621	OBLITERATION OF SEDIMENT BASIN	12	CU. YD.
621	SEDIMENT REMOVAL AND DISPOSAL	62	CU. YD.
621	ROCK DITCH CHECKS	45	CU. YD.
SS & 621	FILTER SOCK (12")	50	LIN. FT.
623	SECOND SEEDING APPLICATION	2.65	ACRE
624	SOLID SODDING	183	SQ. YD.
SP & 625	GEOTEXTILE FABRIC (TYPE 8)	30220	SQ. YD.
SS & 632	CONCRETE ISLAND	1725	SQ. YD.
SS & 633	CONCRETE WALKS	220	SQ. YD.
SS & 634	CONCRETE COMBINATION CURB AND GUTTER (TYPE A) (1' 6")	3059	LIN. FT.
641	WHEELCHAIR RAMPS (TYPE 5)	10	SQ. YD.
641	WHEELCHAIR RAMPS (TYPE 6)	11	SQ. YD.
SP	PTZ CAMERAS	4	EACH
SP	ELECTRICAL CONDUCTORS-IN-CONDUIT (2C/8 A.W.G., E.G.C.)	2802	LIN. FT.
SP	ELECTRICAL CONDUCTORS-IN-CONDUIT (2C/6 A.W.G.)	1908	LIN. FT.
SP	ELECTRICAL CONDUCTORS-IN-CONDUIT (2C/4 A.W.G., E.G.C.)	2754	LIN. FT.
SP	ELECTRICAL CONDUCTORS-IN-CONDUIT (2C/10 A.W.G., E.G.C.)	1029	LIN. FT.
SP	ELECTRICAL CONDUCTORS-IN-CONDUIT (2C/3 A.W.G., E.G.C.)	1351	LIN. FT.
SP	ELECTRICAL CONDUCTORS-IN-CONDUIT (1C/6 A.W.G.)	1908	LIN. FT.
SP	ELECTRICAL CONDUCTORS FOR LUMINAIRES	2338	LIN. FT.
710	NON-METALLIC CONDUIT (1")	3498	LIN. FT.
710	NON-METALLIC CONDUIT (2")	5622	LIN. FT.
711	CONCRETE PULL BOX (TYPE 2 HD)	17	EACH
711	CONCRETE PULL BOX (TYPE 3 HD)	11	EACH
SP	HIGH MAST ILLUMINATION ASSEMBLY (100'-4 LUMINAIRE)	2	EACH
715	TRAFFIC SIGNAL PEDESTAL POLE WITH FOUNDATION	4	EACH
SP	RADAR DETECTION SYSTEM	2	EACH
SP	PEDESTAL TYPE SERVICE POINT (100 AMP)	1	EACH
718	REFLECTORIZED PAINT PAVEMENT MARKING WHITE (10")	1707	LIN. FT.
719	THERMOPLASTIC PAVEMENT MARKING WHITE (6")	6747	LIN. FT.
719	THERMOPLASTIC PAVEMENT MARKING WHITE (8")	2095	LIN. FT.
719	THERMOPLASTIC PAVEMENT MARKING (WORDS)	10	EACH
719	THERMOPLASTIC PAVEMENT MARKING (ARROWS)	14	EACH
SP & 719	THERMOPLASTIC PAVEMENT MARKING SYMBOLS (WHEELCHAIR)	1	EACH
SS & 725	GUIDE SIGN-ROADSIDE MOUNTED (DEMOUNTABLE LEGEND)	334	SQ. FT.
SS & 726	STANDARD SIGN	42	SQ. FT.
SS & 730	BREAKAWAY SIGN SUPPORT (TYPE G-2)	2192	POUND
SP	OMNI-DIRECTIONAL BREAKAWAY SIGN SUPPORTS (TYPE G-1)	10	EACH
SP	DYNAMIC MESSAGING SYSTEM	1	EACH
SP	SAWCUT EXISTING CONCRETE PAVEMENT	3292	LIN. FT.
SP	TRASH RECEPTACLE	11	EACH
SP	ELECTRIC METER	1	EACH

SUMMARY OF QUANTITIES (BOX 2 OF 2)

ITEM NUMBER	ITEM	QUANTITY	UNIT
SP	PVC AWWA C900 CLASS 160 (1")	55	LIN. FT.
SP	PVC AWWA C900 CLASS 160 (3")	99	LIN. FT.
SP	PVC AWWA C900 CLASS 150 (6")	310	LIN. FT.
SP	GATE VALVE (6")	1	EACH
SP	FIRE HYDRANT ASSEMBLY	1	EACH
SP	MJ TEE (3" X 3")	1	EACH
SP	MJ TEE (6" X 6")	1	EACH
SP	DUCTILE IRON FITTINGS	160	LBS.
SP	SANITARY SEWER FORCE MAIN (2 1/2")	2968	LIN. FT.
SP	SANITARY SEWER PIPE (PVC SDR-26) (4")	50	LIN. FT.
SP	SANITARY SEWER PIPE (PVC SDR-26) (6")	15	LIN. FT.
SP	SANITARY SEWER CLEANOUT (4")	5	EACH
SP	SANITARY SEWER MANHOLES (4')	1	EACH
SP	SANITARY SEWER GRINDER PUMP STATION	1	EACH
SP	SANITARY SEWER GRINDER	1	EACH
SP	TAPPING SADDLE (2.5")	1	EACH
SP	GATE VALVE (2.5")	1	EACH
SP	GAS SERVICE	1	EACH
SP	GAS LINE	452	LIN. FT.
SP	FIBER OPTIC CABLE	5550	LIN. FT.
SP	FIBER OPTIC SERVICE	1	EACH
SP	AHP SUBSTATION	1.00	LS
SP	PUBLIC RESTROOM	1.00	LS
SP	PARKING DETECTION	1.00	LS
SP	PIPE BOLLARD	32	EACH
SP	LED ROADWAY ILLUMINATION POLE (15,000 LUMENS, COBRA HEAD, T-BASE, 40')	5	EACH
SP	LED ROADWAY ILLUMINATION POLE (15,000 LUMENS, COBRA HEAD, SHOE BASE, 40')	2	EACH
SP	LED ROADWAY ILLUMINATION POLE (15,000 LUMENS, COBRA HEAD, SHOE BASE, 50')	2	EACH

REVISIONS

DATE	REVISION	SHEET NUMBER
4/26/2021	REMOVED DISADVANTAGED BUSINESS ENTERPRISE BIDDER'S RESPONSIBILITIES AND GOALS FOR DISADVANTAGED BUSINESS ENTERPRISE PARTICIPATION	3 & 19
5/6/2021	REVISED "ELECTRICAL CONDUCTORS-IN-CONDUIT", "WATER DISTRIBUTION FACILITIES", "SANITARY SEWER FACILITIES", "SANITARY SEWER GRINDER PUMP STATION", AND "SANITARY SEWER GRINDER" SPS; ADDED "PTZ CAMERAS", "RADAR DETECTION SYSTEM", AND "DYNAMIC MESSAGING SYSTEM" SPS; ADDED SHEETS 10A AND 10B TO SHEET INDEX ON SHEET 2; ADDED "PTZ CAMERAS", "RADAR DETECTION SYSTEM", AND "DYNAMIC MESSAGING SYSTEM" SPS TO SHEET 3; REVISED CALLOUT OF DYNAMIC MESSAGING SYSTEM FOR ML40-TP275-2WB DETAIL ON SHEET 7; ADDED DETAILS FOR THRUST BLOCKING, FIRE HYDRANT ASSEMBLY, SANITARY SEWER CLEAN-OUT, CAST-IN-PLACE SANITARY SEWER MANHOLES, AND PIPE TRENCHING AND BEDDING TO SHEETS 10A AND 10B; REVISED PAY ITEM NAMES FOR TAPPING SADDLE (2.5") AND GATE VALVE (2.5"), ADDED QUANTITY ITEMS FOR 2.5" TAPPING SADDLE AND 2.5" GATE VALVE TO SANITARY SEWER QUANTITIES, AND REVISED ELECTRICAL QUANTITIES WITH CONDUIT SIZE, WIRE GAUGE, AND QUANTITIES FOR PTZ CAMERAS AND RADAR SYSTEMS ON SHEET 18; REVISED PAY ITEM NAMES FOR TAPPING SADDLE (2.5") AND GATE VALVE (2.5"), ADDED QUANTITY ITEMS FOR TAPPING SADDLE (2.5") AND GATE VALVE (2.5") TO SUMMARY OF QUANTITIES, REVISED SUMMARY OF QUANTITIES TO INCLUDE CONDUIT SIZE, WIRE GAUGE, AND QUANTITIES FOR PTZ CAMERAS AND RADAR DETECTION SYSTEM, REVISED SUMMARY OF QUANTITIES TO PROPOSE 2 40' SHOE BASE ILLUMINATON POLES AND 2 50' SHOE BASE ILLUMINATION POLES, AND REVISED ORDER OF PAY ITEMS FOR ELECTRICAL CONDUCTORS-IN-CONDUIT (2C/10 A.W.G., E.G.C.), ELECTRICAL CONDUCTORS-IN-CONDUIT (2C/3 A.W.G., E.C.G.), PTZ CAMERAS, RADAR DETECTION SYSTEM, TAPPING SADDLE (2.5"), GATE VALVE (2.5"), AND LED ROADWAY ILLUMINATION POLE (15,000 LUMENS, COBRA HEAD, SHOE BASE, 50') ON SHEET 19; CALLED OUT TRAFFIC SIGNAL PEDESTAL POLES WITH CIRCUIT NUMBERS, CONDUIT SIZES, AND WIRE GAUGES AND REVISED UNDERGROUND FIBER OPTIC AND ELECTRIC CABLE CALLOUTS TO REMOVE CONDUIT SIZE ON SHEET 27; REVISED INVERT FLOW DIRECTION IN CALLOUT ON SHEET 28; REVISED INVERT ELEVATIONS IN CALLOUT AND ADDED NOTE 14 CALLOUT TO POWER POLES 8 AND 9 ON SHEET 28; REVISED CALLOUT TO INDICATE THAT PROPOSED FORCE MAIN WILL CONNECT TO EXISTING FORCE MAIN WITH 2.5" TAPPING SADDLE AND 2.5" GATE VALVE ON SHEET 29; ADDED FOUNDATION DIMENSIONS TO SHEET 42; REVISED SUMMARY OF ILLUMINATION QUANTITIES TO PROPOSE 2 40' SHOE BASE ILLUMINATON POLES AND 2 50' SHOE BASE ILLUMINATION POLES ON SHEET ON SHEET 59; REVISED HEIGHTS OF POLES 8 AND 9 AND REVISED ILLUMINATION TABLES ON SHEET 60	2, 3, 7, 10A, 10B, 18, 19, 27, 28, 29, 42, 59, 60

STATE OF ARKANSAS
REGISTERED PROFESSIONAL ENGINEER
No. 10479
BRENT L. MASSEY

5/13/2021

31944 - QNTY.dgn 5/13/2021

SUMMARY OF QUANTITIES AND REVISIONS

DATE REVISED	DATE FILMED	DATE REVISED	DATE FILMED	FED.RD. DIST.NO.	STATE	FED. AID PROJ. NO.	SHEET NO.	TOTAL SHEETS
05-06-21				6	ARK.			
				JOB NO.	110800		27	70

(2) UTILITY PLAN

RESOURCE LIST

1. NATURAL GAS: CENTERPOINT ENERGY - 501-454-1308
2. SANITARY SEWER: WEST MEMPHIS UTILITIES - 870-702-5153
3. ELECTRIC: WEST MEMPHIS UTILITIES - 870-702-5131
4. WATER: WEST MEMPHIS UTILITIES - 870-702-5153

GENERAL NOTES

A. ALL FIBER OPTIC CABLE TO BE RUN IN SCHEDULE 40 PVC CONDUIT. SIZE SPECIFIED ON PLANS.

B. ALL UNDERGROUND ELECTRIC CABLE TO BE RUN IN SCHEDULE 40 PVC CONDUIT. SIZE SPECIFIED ON PLANS. (REFER TO LIGHTING PLAN)

C. ARDOT TO CONNECT AND INSTALL CAMERA AND RADAR EQUIPMENT.

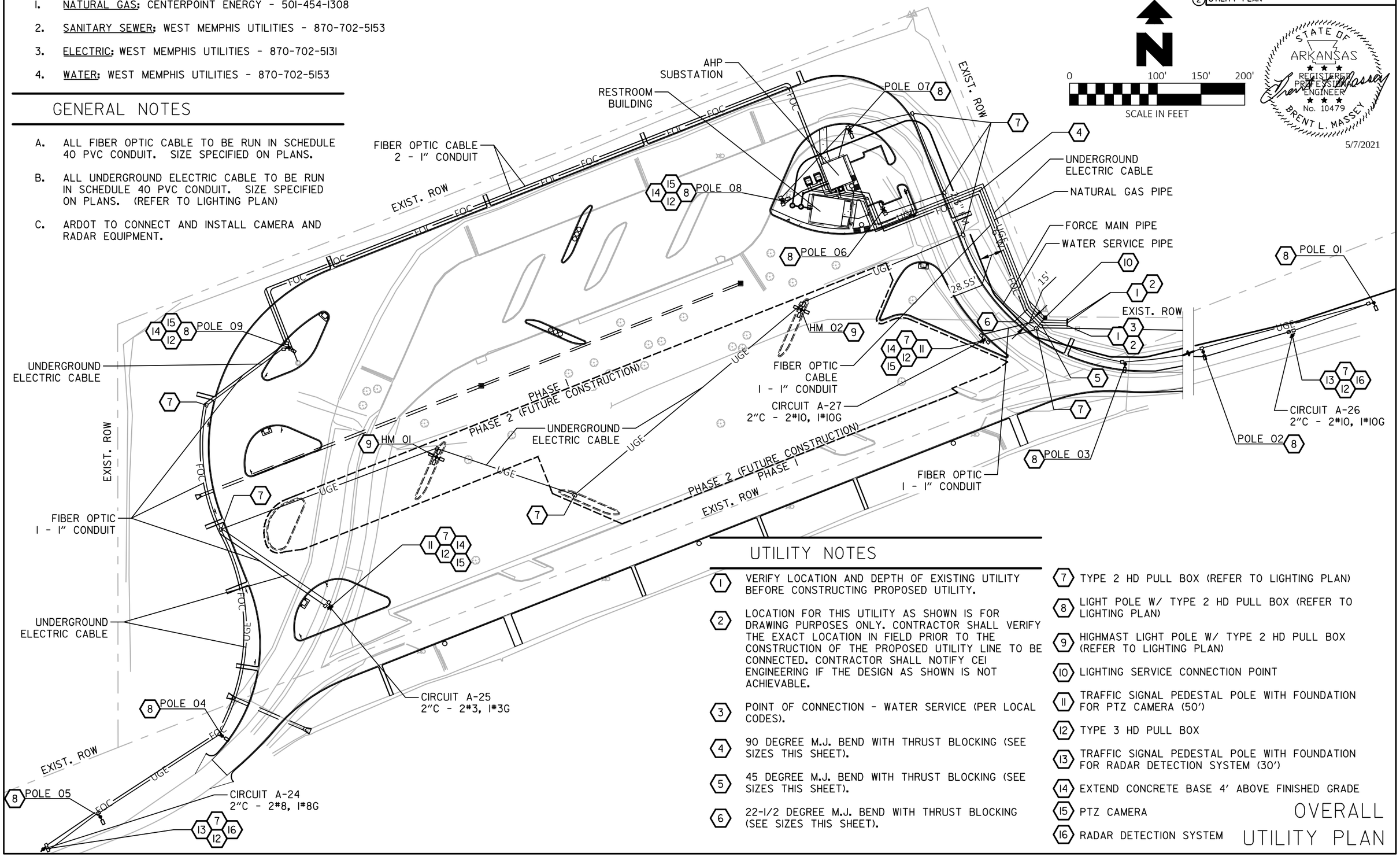

STATE OF ARKANSAS
REGISTERED PROFESSIONAL ENGINEER
No. 10479
BRENT L. MASSEY
5/7/2021

UTILITY NOTES

(1) VERIFY LOCATION AND DEPTH OF EXISTING UTILITY BEFORE CONSTRUCTING PROPOSED UTILITY.

(2) LOCATION FOR THIS UTILITY AS SHOWN IS FOR DRAWING PURPOSES ONLY. CONTRACTOR SHALL VERIFY THE EXACT LOCATION IN FIELD PRIOR TO THE CONSTRUCTION OF THE PROPOSED UTILITY LINE TO BE CONNECTED. CONTRACTOR SHALL NOTIFY CEI ENGINEERING IF THE DESIGN AS SHOWN IS NOT ACHIEVABLE.

(3) POINT OF CONNECTION - WATER SERVICE (PER LOCAL CODES).

(4) 90 DEGREE M.J. BEND WITH THRUST BLOCKING (SEE SIZES THIS SHEET).

(5) 45 DEGREE M.J. BEND WITH THRUST BLOCKING (SEE SIZES THIS SHEET).

(6) 22-1/2 DEGREE M.J. BEND WITH THRUST BLOCKING (SEE SIZES THIS SHEET).

(7) TYPE 2 HD PULL BOX (REFER TO LIGHTING PLAN)

(8) LIGHT POLE W/ TYPE 2 HD PULL BOX (REFER TO LIGHTING PLAN)

(9) HIGHMAST LIGHT POLE W/ TYPE 2 HD PULL BOX (REFER TO LIGHTING PLAN)

(10) LIGHTING SERVICE CONNECTION POINT

(11) TRAFFIC SIGNAL PEDESTAL POLE WITH FOUNDATION FOR PTZ CAMERA (50')

(12) TYPE 3 HD PULL BOX

(13) TRAFFIC SIGNAL PEDESTAL POLE WITH FOUNDATION FOR RADAR DETECTION SYSTEM (30')

(14) EXTEND CONCRETE BASE 4' ABOVE FINISHED GRADE

(15) PTZ CAMERA

(16) RADAR DETECTION SYSTEM

OVERALL UTILITY PLAN

5/6/2021

31944 - UP.dgn

DATE REVISED	DATE FILMED	DATE REVISED	DATE FILMED	FED.RD. DIST.NO.	STATE	FED. AID PROJ. NO.	SHEET NO.	TOTAL SHEETS
05-06-21				6	ARK.			
				JOB NO.	110800		28	70

(2) UTILITY PLAN

UTILITY NOTES

1. METERED DOMESTIC WATER SERVICE ENTRY PER ARCH. PLANS (SEE SIZES THIS SHEET).
2. M.J. GATE VALVE WITH ADJUSTABLE VALVE BOX (SEE SIZES THIS SHEET).
3. M.J. TEE WITH THRUST BLOCKING (SEE SIZES THIS SHEET).
4. M.J. REDUCER (SEE SIZES THIS SHEET).
5. FIRE HYDRANT ASSEMBLY (PER LOCAL CODES).
6. WATER METER IS LOCATED AT COLLEGE BLVD. CONTRACTOR TO TEST IT OR INSTALL A NEW ONE (PER LOCAL CODES).
7. SANITARY SEWER SERVICE ENTRY (PER ARCH. PLANS).
8. SANITARY SEWER CLEAN-OUT.
9. GRINDER PUMP STATION.
10. 4' INSIDE DIAMETER SANITARY SEWER MANHOLE W/ INLINE GRINDER
11. PROPOSED 4'x4' TRANSFORMER PAD
12. POINT OF CONNECTION FOR ELECTRICAL SERVICE (PER ELECTRIC COMPANY REQUIREMENTS AND ARC. PLANS).
13. PROPOSED GENERATOR. (REFER TO ARCHITECTURAL PLANS)
14. GAS SERVICE PER LOCAL GAS COMPANY.
15. PROPOSED GAS METER.

GENERAL NOTES

A. ALL FIBER OPTIC CABLE TO BE RUN IN SCHEDULE 40 PVC CONDUIT. SIZE SPECIFIED ON PLANS.

B. ALL UNDERGROUND ELECTRIC CABLE TO BE RUN IN SCHEDULE 40 PVC CONDUIT. SIZE SPECIFIED ON PLANS. (REFER TO LIGHTING PLAN)

C. ARDOT TO CONNECT AND INSTALL CAMERA AND RADAR EQUIPMENT.

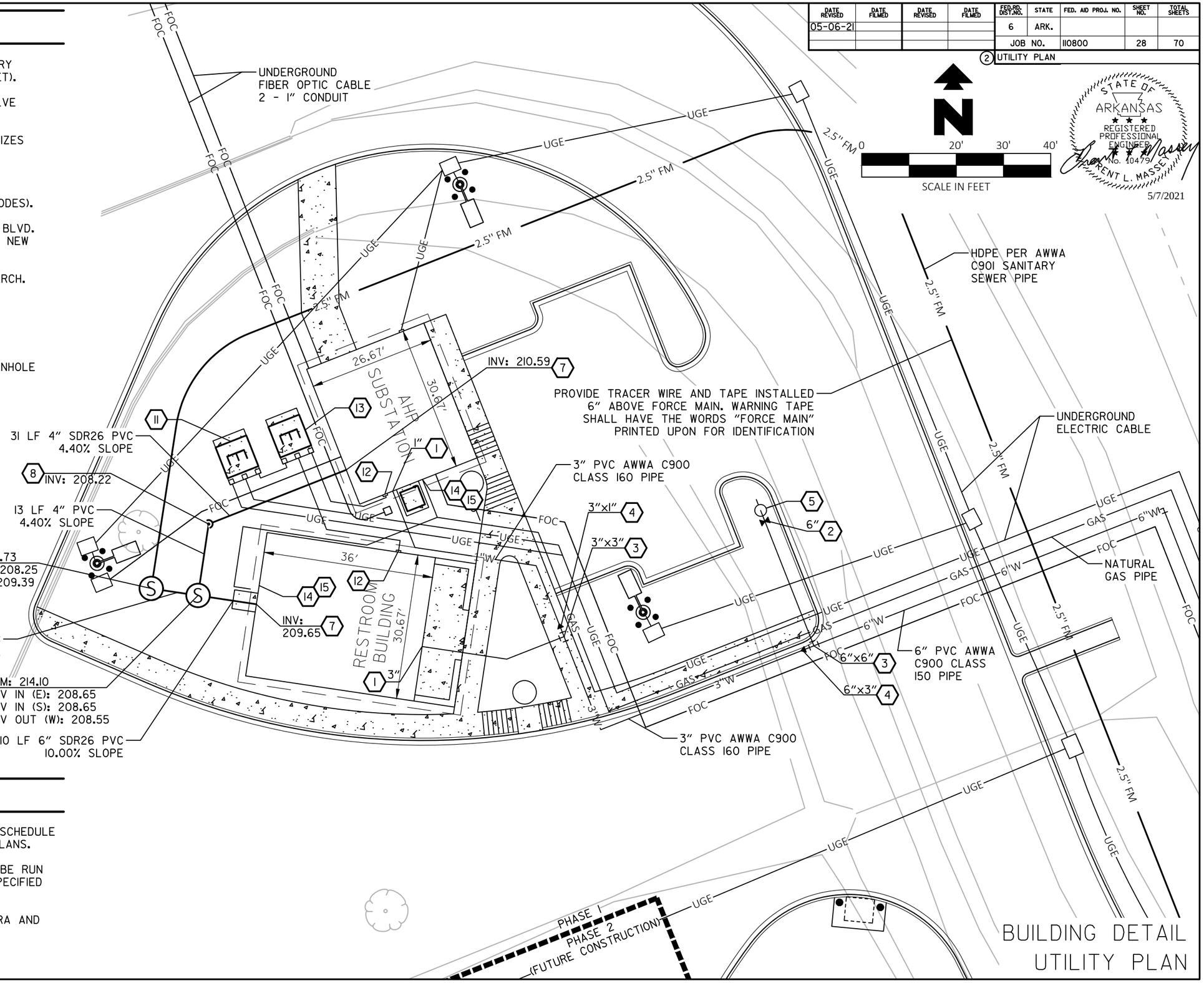

STATE OF ARKANSAS
REGISTERED PROFESSIONAL ENGINEER
No. 10479
BRENT L. MASSEY
5/7/2021

BUILDING DETAIL UTILITY PLAN

5/6/2021

31944 - UP.dgn

RESOURCE LIST

1. NATURAL GAS: CENTERPOINT ENERGY - 501-454-1308
2. SANITARY SEWER: WEST MEMPHIS UTILITIES - 870-702-5153
3. ELECTRIC: WEST MEMPHIS UTILITIES - 870-702-5131
4. WATER: WEST MEMPHIS UTILITIES - 870-702-5153

DATE REVISED	DATE FILMED	DATE REVISED	DATE FILMED	FED.RD. DIST.NO.	STATE	FED. AID PROJ. NO.	SHEET NO.	TOTAL SHEETS
05-06-21				6	ARK.			
				JOB NO.	110800		29	70

(2) UTILITY PLAN

0 200' 300' 400'

SCALE IN FEET

STATE OF ARKANSAS
REGISTERED PROFESSIONAL ENGINEER
No. 10479
BRENT L. MASSEY
5/7/2021

SANITARY SEWER FORCE MAIN CONNECTION POINT PER SEWER LINE RELOCATION FOR TOURIST INFORMATION CENTER WEST MEMPHIS, ARKANSAS JOB NO. 110358 PREPARED BY SORRELL CONSULTING ENGINEERS. CONTRACTOR SHALL VERIFY EXISTING FORCE MAIN IS CLEAR AND OPERATIONAL BEFORE FINAL CONNECTION.

CONNECT TO EXISTING FORCE MAIN WITH 2.5" TAPPING SADDLE & 2.5" GATE VALVE

CONTRACTOR SHALL INSTALL APPROXIMATELY 3000 LF OF HDPE PER AWWA C901 SANITARY SEWER FORCE LINE AT LEAST 3' FROM R/W

PROVIDE TRACER WIRE AND TAPE INSTALLED 6" ABOVE FORCE MAIN. WARNING TAPE SHALL HAVE THE WORDS "FORCE MAIN" PRINTED UPON FOR IDENTIFICATION. RESTORE GRADE TO EXISTING CONDITIONS. REESTABLISH VEGETATION PRIOR TO CONSTRUCTION COMPLETION.

MASNER ROAD

2.5" FM

US HIGHWAY 63

EXIST. ROW

EXIST. ROW

EXIST. ROW

PHASE 2

PHASE 1

FORCE MAIN CONNECTION UTILITY PLAN

5/6/2021

31944 - UP.dgn

GENERAL FOUNDATION NOTES:

1. FOOTINGS SHALL BE UNDERLAIN BY A MINIMUM OF 18 INCHES OF COMPACTED, IMPORTED FILL. THE REQUIREMENTS OF MINIMUM 18 INCHES OF IMPORTED FILL UNDER THE FOOTINGS ARE GENERALLY SATISFIED WITH ADEQUATE SURFACE STRIPPING AND THE APPROXIMATELY 2.5–3 FOOT OF FILL TO BE PLACED IN THE BUILDING AREA PER THE GRADING PLAN . HOWEVER, SOME MASS UNDERCUT MAY BE REQUIRED TO ACCOMMODATE THE MINIMUM THICKNESS OF COMPACTED FILL BELOW FOOTINGS, DEPENDING ON FOOTING DEPTH, SITE TERRAIN, AND SEASONAL SITE CONDITIONS.
2. IF SEASONAL SITE CONDITIONS WARRANT MASS UNDERCUT, MASS UNDERCUTS SHOULD EXTEND AT LEAST 5 FEET OUTSIDE THE BUILDING LIMITS OR TO THE EXTENT POSSIBLE. ALL THE CONSTRUCTION DEBRIS EXPOSED DURING STRIPPING AND/OR UNDERCUT SHALL BE COMPLETELY REMOVED AND PROPERLY BACKFILLED.
3. IMPORTED BORROW FILL OR UNDERCUT BACKFILL SHALL CONSIST OF AN APPROVED LOW–PLASTICITY CLAYEY (SC), SANDY CLAY (CL), OR CLAYEY GRAVEL (GC) WITH A PLASTICITY INDEX (PI) BETWEEN 5 AND 20 OR AN APPROVED ALTERNATE. ALL BACKFILL UNDER THE BUILDING FOOTPRINTS AND AT LEAST 5 FEET OUTSIDE THE BUILDING PERIMETER SHALL BE COMPOSED OF IMPORTED BORROW.
4. AFTER STRIPPING AND PERFORMING ANY UNDERCUT, AND PRIOR TO FILL PLACEMENT, THE SUBGRADE SHALL BE PROOF–ROLLED WITH A LOADED TANDEM–WHEEL DUMP TRUCK OR SIMILAR EQUIPMENT. AREAS IDENTIFIED TO BE SOFT OR UNSTABLE SHOULD BE COMPACTED OR OTHERWISE UNDERCUT AND REPLACED WITH SELECT FILL.
5. THE ON–SITE SOILS ARE NOT SUITABLE FOR FILL AND BACKFILL IN THE BUILDING AREAS.
6. FILL, BACKFILL, AND RE–COMPACTED SOILS SHOULD BE COMPACTED TO A MINIMUM OF 98% OF SELECTED PROCTOR. SUITABLE PROCTOR SHALL BE SELECTED UTILIZING THE CRITERIA SPECIFIED IN 2014 ARDOT STANDARD SPECIFICATIONS SUB–SECTION 210.10. FILL AND BACKFILL SHALL BE PLACED IN HORIZONTAL 6–8 INCH LOOSE LIFTS. DENSITY AND MOISTURE OF EACH LIFT SHALL HAVE A MINIMUM OF ONE TEST PER LIFT AND APPROVED PRIOR TO PLACING SUBSEQUENT LIFTS.
7. THE 4" THICK SLABS ON GRADE SHALL BE SUPPORTED ON A 6 INCH THICK CLEAN CRUSHED STONE OR GRAVEL LAYER PLACED ON A PROPERLY PREPARED SUBGRADE. SUITABLE MATERIALS FOR THIS INCLUDE MINERAL AGGREGATE (CLASS 3) OR COARSE AGGREGATE COMPLYING WITH SUB–SECTION 802.02(c) FOR CLASS S CONCRETE. THE GRANULAR LAYER SHALL BE DENSIFIED WITH VIBRATING EQUIPMENT PRIOR TO FLOOR SLAB CONSTRUCTION. 10 MILL SHEETING SHALL BE PLACED BETWEEN THE SLAB AND GRANULAR LAYER.
8. CONCRETE FOUNDATIONS AND SLABS SHALL BE CLASS S CONCRETE PER SECTION 802 OF THE 2014 ARDOT STANDARD SPECIFICATIONS.

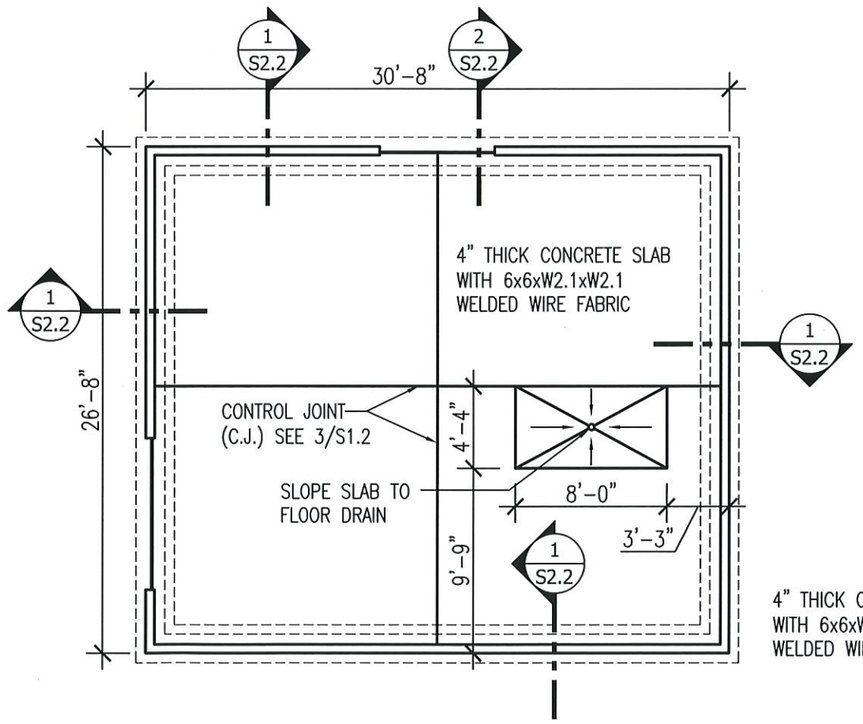

NORTH PLAN NORTH

1 S1.1

AHP SUBSTATION FOUNDATION PLAN

SCALE: 1/8"=1'-0"

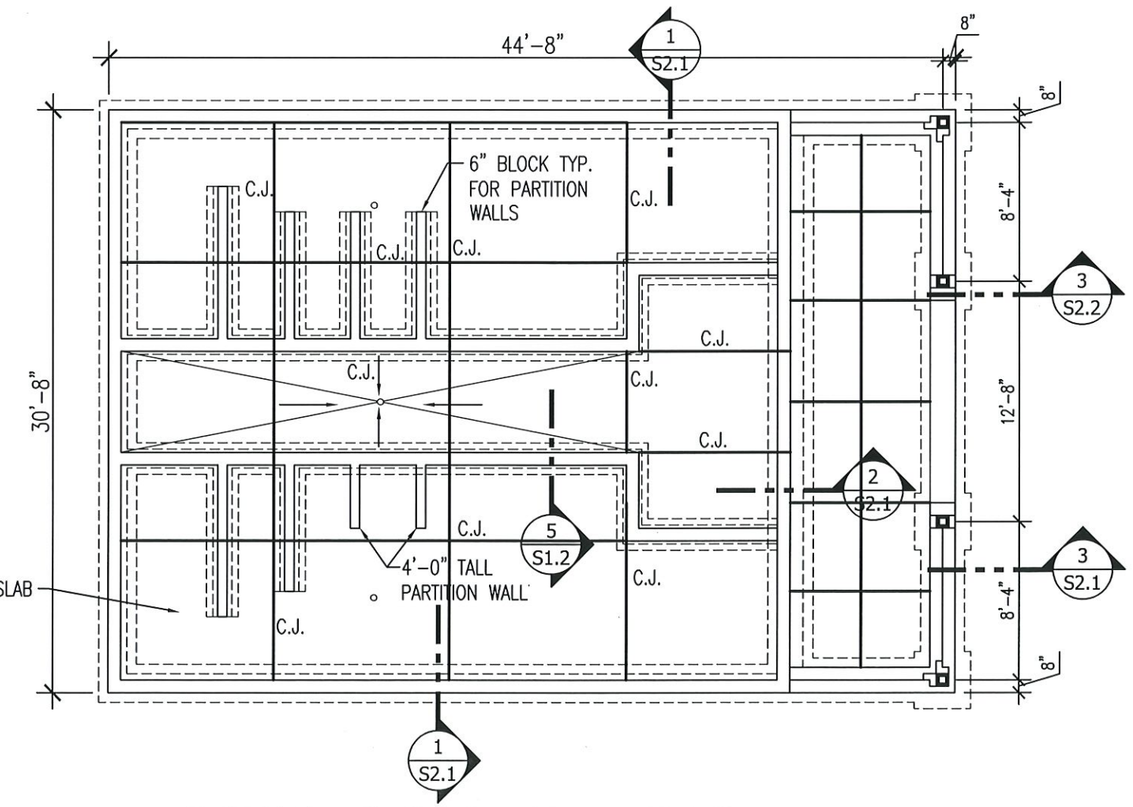

NORTH

1 A2.2

RESTROOM BUILDING FOUNDATION PLAN

SCALE: 1/8"=1'-0"

ARDOT ARKANSAS DEPARTMENT OF TRANSPORTATION

I-40 TRUCK PARKING EXPANSION PROJECT
(WEST MEMPHIS) (S)
West Memphis, Arkansas
Crittenden County

STATE OF ARKANSAS REGISTERED PROFESSIONAL ENGINEER No. 7527 JOSEPH A. SANTINI
5-6-21

DATE: MARCH 26, 2021
JOB NO: 110800
DRAWN BY: K.B.
REVISIONS: 5–6–21

S1.1
42 OF 70

DATE REVISED	DATE FILMED	DATE REVISED	DATE FILMED	FED.RD. DIST.NO.	STATE	FED.AID PROJ.NO.	SHEET NO.	TOTAL SHEETS
05/06/2021				6	ARK.			
				JOB NO.		110800	59	70

(2) ILLUMINATION NOTES AND QUANTITIES

STATE OF ARKANSAS
LICENSED PROFESSIONAL ENGINEER
No. 7637
JOSEPH A. SARTINI
5-6-21

GENERAL NOTES:

1. ALL ELECTRICAL WORK SHALL BE PERFORMED IN ACCORDANCE WITH NATIONAL ELECTRICAL CODE (NFPA 70, CURRENT EDITION), LIFE SAFETY CODE (NFPA 101, CURRENT EDITION), UNDERGROUND FACILITIES DAMAGE PREVENTION ACT (§14-271-101 ET SEQ.), AND LOCAL ELECTRICAL CODE. IN ADDITION, ALL PARTS OF THIS INSTALLATION SHALL BE IN ACCORDANCE WITH THE ARKANSAS DEPARTMENT OF TRANSPORTATION STANDARD SPECIFICATIONS FOR HIGHWAY CONSTRUCTION, CURRENT EDITION.

2. PRIOR TO CONSTRUCTION, THE CONTRACTOR SHALL PROVIDE DOCUMENTATION TO PROJECT ENGINEER, TO ENSURE ARKANSAS STATE CODES (§17-28-101 ET SEQ. AND §20-31-101 ET SEQ.) ARE MET. THE DOCUMENTATION SHALL INCLUDE:
   (1) ELECTRICIANS' LICENSE INFORMATION AND EXPIRATION DATE.
   (2) THE RATIO OF LICENSED-ELECTRICIAN-TO-APPRENTICE-ELECTRICIANS.
   (3) PRINTED SEARCH RESULT OF LICENSED ELECTRICIANS FROM ARKANSAS DEPARTMENT OF LABOR ELECTRICIAN LICENSEE DIRECTORY (https://www.ark.org/labor/electrician/search.php)
   ALL LICENSES SHALL BE VALID AND CURRENT.

3. THE CONTRACTOR SHALL NOT ENGAGE IN EXCAVATION OR DEMOLITION ACTIVITIES WITHOUT HAVING FIRST NOTIFIED THE ARKANSAS ONE CALL CENTER IN ACCORDANCE WITH UNDERGROUND FACILITIES DAMAGE PREVENTION ACT. NOT ALL UTILITY COMPANIES ARE MEMBERS OF THE ARKANSAS ONE CALL SYSTEM. THE CONTRACTOR IS ADVISED TO CONTACT ALL NON-MEMBER UTILITIES AS WELL AS THE ONE CALL CENTER.

4. UNDERGROUND UTILITIES EXIST WITHIN AND ADJACENT TO THE LIMITS OF CONSTRUCTION. SOME UTILITES MAY HAVE BEEN RELOCATED SINCE THE TIME OF DESIGN AND THE CONTRACTOR'S NOTICE TO PROCEED. THE CONTRACTOR SHALL CONTACT THE UTILITY COMPANIES INVOLVED AND VERIFY THE LOCATIONS OF UNDERGROUND UTILITIES. THE CONTRACTOR SHALL MAINTAIN THE UTILITY LOCATION MARKINGS UNTIL IT IS NO LONGER NECESSARY.

5. THE CONTRACTOR SHALL BE RESPONSIBLE FOR ALL COSTS OF REPAIR OR REPLACEMENT OF EXISTING UTILITES DAMAGED DURING THE CONSTRUCTION.

6. ANY EQUIPMENT OR APPURTENANCE THAT INTERFERES WITH THE PROPOSED CONSTRUCTION AND WHICH MAYBE THE PROPERTY OF UTILITY SERVICE ORGANIZATIONS SHALL BE MOVED BY THE OWNERS UNLESS OTHERWISE PROVIDED.

7. CONDUIT INSTALLED UNDER ROADWAY SURFACES SHALL BE INSTALLED BY A PUSHING OR BORING METHOD OR AS DIRECTED BY ENGINEER. PVC OR HDPE CONDUIT SHALL BE USED. PVC CONDUIT SHALL BE MARKED "DIR. BORING" OR "DIRECTIONAL BORING" AS PER NEC.

8. NON-DESTRUCTIVE MEG TEST AND CURRENT LEAKAGE TEST SHALL BE PERFORMED ON NEW CONDUCTORS, IN THE PRESENCE OF FIELD INSPECTOR. THE TEST VOLTAGE SHALL BE LIMITED TO 600 VOLTS. ANY CONDUCTOR NOT MEETING THE MIMINUM ACCEPTABLE VALUE SHALL BE REPLACED AT THE CONTRACTOR'S EXPENSE USING NEW CONDUCTOR. THE RESULTS SHALL BE DOCUMENTED AND PROVIDED TO THE JOB ENGINEER. THE CONTRACTOR SHALL BE RESPONSIBLE FOR ALL DAMAGES CAUSED BY MEG TEST WHILE DEVICES OR ACCESSORIES ARE STILL CONNECTED AND SHALL BE REPLACED AT CONTRACTOR'S EXPENSE. SEE SPECIAL PROVISION ELECTRICAL CONDUCTORS-IN-CONDUIT.

9. PULL BOX LIDS SHALL CLOSE FLUSH WITHOUT PINCHING ANY CONDUCTORS. CONDUIT LENGTHS IN PULL BOXES SHALL BE SET ACCORDINGLY. ANY CONDUCTORS THAT HAVE BEEN DAMAGED BY PINCHING SHALL BE COMPLETELY REPLACED AT CONTRACTOR'S EXPENSE.

10. EACH ROADWAY ILLUMINATION POLE SHALL BE BONDED TO EQUIPMENT GROUNDING CONDUCTOR PER NEC. SEE ARTICLES 250 AND 410.

11. ALL ELECTRICAL COMPONENTS SHALL BE UL LISTED.

12. ALL LUMINAIRE ASSEMBLIES SHALL HAVE BUG RATING OF U0.

13. PULL CABLE SHALL BE MINIMUM 1/4" PULL NYLON OR POLYESTER ROPE, OR 1200 LBS PULL TAPE WHEN PULLING CONDUCTORS. STEEL CABLE OR FISH TAPE SHALL NOT BE USED. CONNECT PULLING DEVICES TO COPPER WIRE AND NOT TO JACKET. USE PULLING COMPOUND PER MANUFACTURER'S REQUIREMENTS. ALL BENDS SHALL NOT BE LESS THAN RECOMMENDED BY NEC FOR CONDUCTORS USED.

14. ALL CONCRETE PULL BOXES SHALL BE TYPE 2 HD UNLESS OTHERWISE INDICATED ON THE PLANS.
    ALL CONDUIT SHALL BE 2" UNLESS OTHERWISE INDICATED ON THE PLANS.

15. SLACK CABLES IN PULL BOXES SHALL BE 3 FEET.

SUMMARY OF ILLUMINATION QUANTITIES

ITEM NUMBER	ITEM	QUANTITY	UNIT
SP	ELECTRICAL CONDUCTORS-IN-CONDUIT (2C/8 A.W.G., E.G.C.)	1129	LIN. FT.
SP	ELECTRICAL CONDUCTORS-IN-CONDUIT (2C/6 A.W.G.)	1908	LIN. FT.
SP	ELECTRICAL CONDUCTORS-IN-CONDUIT (2C/4 A.W.G., E.G.C.)	2754	LIN. FT.
SP	ELECTRICAL CONDUCTORS-IN-CONDUIT (1C/6 A.W.G.)	1908	LIN. FT.
SP	ELECTRICAL CONDUCTORS FOR LUMINAIRES	2338	LIN. FT.
710	NON-METALLIC CONDUIT (2")	3023	LIN. FT.
711	CONCRETE PULL BOX (TYPE 2 HD)	13	EACH
711	CONCRETE PULL BOX (TYPE 3 HD)	5	EACH
SP	HIGH MAST ILLUMINATION ASSEMBLY (100'-4 LUMINAIRE)	2	EACH
SP	PEDESTAL TYPE SERVICE POINT (100 AMP)	1	EACH
SP	LED ROADWAY ILLUMINATION POLE (15,000 LUMENS, COBRA HEAD, T-BASE, 40')	5	EACH
SP	LED ROADWAY ILLUMINATION POLE (15,000 LUMENS, COBRA HEAD, SHOE BASE 40')	2	EACH
SP	LED ROADWAY ILLUMINATION POLE (15,000 LUMENS, COBRA HEAD, SHOE BASE 50')	2	EACH

LOCATION: I-40 WESTBOUND TRUCK PARKING
CITY: WEST MEMPHIS
COUNTY: CRITTENDEN
DISTRICT: 01 SCALE: N/A DRAWN BY: PC

M110800_LIGHTING.DGN 5/6/2021

DATE REVISED	DATE FILMED	DATE REVISED	DATE FILMED	FED.RD. DIST.NO.	STATE	FED.AID PROJ.NO.	SHEET NO.	TOTAL SHEETS
05/06/21				6	ARK.			
				JOB NO.		110800	60	70

(2) ILLUMINATION TABLES

STATE OF ARKANSAS
LICENSED PROFESSIONAL ENGINEER
No. 7527
JOSEPH A. HARTLEY

LUMINAIRE SCHEDULE

POLE NO.	NORTHING	EASTING	STA.	OFFSET (FT)	CENTER LINE	POLE HT. (FT)	POLE ARM (FT)	POLE BASE	ORIENTATION ANGLE (PLAN NORTH = 0°, CLOCKWISE ROTATION)
SERVICE POINT	304344.90	1838421.26	9+47.79	171.48	I-40	N/A	N/A	N/A	N/A
POLE 01	304386.90	1838910.19	*	*		40	10	BREAKAWAY	345°
POLE 02	304330.95	1838715.47	*	*		40	10	BREAKAWAY	310°
POLE 03	304289.17	1838510.77	10+10.34	86.60		40	10	BREAKAWAY	270°
POLE 04	303864.98	1837479.70	*	*		40	10	BREAKAWAY	270°
POLE 05	303772.63	1837340.75	*	*		40	10	BREAKAWAY	40°
POLE 06	304465.17	1838234.83	8+19.08	352.17		40	4	NON-BREAKAWAY	0°
POLE 07	304555.71	1838196.10	8+16.56	450.61		40	4	NON-BREAKAWAY	0°
POLE 08**	304475.54	1838119.31	7+15.56	404.52		50	4	NON-BREAKAWAY	220°
POLE 09**	304308.19	1837555.90	1+25.20	452.83		50	4	NON-BREAKAWAY	130°
HIGHMAST 01	304365.09	1838229.47	7+77.07	261.16		100	N/A	N/A	270°
HIGHMAST 02	304196.90	1837812.85	3+24.95	256.58		100	N/A	N/A	270°

NOTES: * INDICATES STA. AND OFFSET NOT AVAILABLE IN SURVEY
** LUMINAIRE MOUNTING HEIGHT FOR POLES 08 AND 09 IS 40 FT

VOLTAGE DROP, CIRCUIT A, ON-RAMP

SEGMENT		VOLTAGE	PHASE	SETS	CONDUCTOR	CURRENT	SEG AMP	Z/1000ft	LENGTH	VD	%VD
Srv. Pt.	POLE 03	240	1	1	#8	0.94	2.82	0.78	125	0.55	0.23
POLE 03	POLE 02	240	1	1	#8	0.94	1.88	0.78	212	0.62	0.26
POLE 02	POLE 01	240	1	1	#8	0.94	0.94	0.78	200	0.29	0.12
									TOTAL		0.61

VOLTAGE DROP, CIRCUIT B, BUILDINGS

SEGMENT		VOLTAGE	PHASE	SETS	CONDUCTOR	CURRENT	SEG AMP	Z/1000ft	LENGTH	VD	%VD
Srv. Pt	Pull Box	240	1	1	#8	0.94	3.76	0.78	211	1.24	0.52
Pull Box	POLE 06	240	1	1	#8	0.94	2.82	0.78	72	0.32	0.13
Pull Box	POLE 07	240	1	1	#8	0.94	1.88	0.78	185	0.54	0.23
POLE 07	POLE 08	240	1	1	#8	0.94	0.94	0.78	112	0.16	0.07
										TOTAL	0.94

VOLTAGE DROP, CIRCUIT C, EXIT RAMP

SEGMENT		VOLTAGE	PHASE	SETS	CONDUCTOR	CURRENT	SEG AMP	Z/1000ft	LENGTH	VD	%VD
Srv. Pt	Pull Box	240	1	1	#6	0.94	2.82	0.49	1071	2.96	1.23
Pull Box	POLE 09	240	1	1	#6	2.94	2.94	0.49	1071	3.09	1.29
Pull Box	POLE 04	240	1	1	#6	0.94	1.88	0.49	244	0.45	0.19
POLE 04	POLE 05	240	1	1	#6	0.94	0.94	0.49	162	0.15	0.06
										TOTAL	2.77

VOLTAGE DROP, CIRCUIT D, HIGH-MAST

SEGMENT		VOLTAGE	PHASE	SETS	CONDUCTOR	CURRENT	SEG AMP	Z/1000ft	LENGTH	VD	%VD
Srv. Pt	HM1	240	1	1	#4	10.21	20.42	0.31	343	4.34	1.81
HM1	HM2	240	1	1	#4	10.21	10.21	0.31	446	2.82	1.18
										TOTAL	2.99

ELECTRICAL SERVICE DATA

CIRCUIT ID	LOCATION	SERVICE VOLTAGE	SERVICE CONDUIT SIZE	SERVICE CONDCUTORS	MAIN CIRCUIT BREAKER	BRANCH CIRCUIT BREAKER	BRANCH CIRCUIT (AMPS)	KVA LOAD
A	SEE LUMINAIRE SCHEDULE TABLE AND ILLUMINATION LAYOUT	120/240V, SINGLE PHASE	2" NMC	2C/8 A.W.G. & E.G.C.	2P/100A	2P/15A	2.82	0.68
B			2" NMC	2C/8 A.W.G. & E.G.C.		2P/15A	2.82	0.68
C			2" NMC	2C/6 A.W.G. & E.G.C.		2P/15A	2.82	0.68
D			2" NMC	2C/4 A.W.G. E.G.C.		20P/50A	20.42	4.90

ILLUMINATION STATISTICS

DESCRIPTION	AVERAGE (FC)	MAXIMUM (FC)	MINIMUM (FC)	AVG/MIN
PARKING LOT	1.1	2.5	0.3	3.7:1
ROADWAY	0.7	1.6	0.2	3.5:1

NOTE:
1. CALCULATIONS WERE BASED ON 0.87 LIGHT LOSS FACTOR.
2. HORIZONTAL ILLUMINATION VALUES ARE SHOWN.

ILLUMINATION DESIGN CRITERIA

DESCRIPTION	AVG. (FC)	AVG/MIN
PARKING LOT	1.0	4:1
RAMPS	0.6	4:1

NOTE:
1. DESIGN BASIS WERE AASHTO ROADWAY LIGHTING DESIGN GUIDE, 7TH ED. AND IES RP-8-18

LOCATION: I-40 WESTBOUND TRUCK PARKING
CITY: WEST MEMPHIS
COUNTY: CRITTENDEN
DISTRICT: 01 SCALE: N/A DRAWN BY: PC

M110800_LIGHTING.DGN 3/11/2021